Appendix N
Public Service Supporting Documents

Table of Contents

PSCo Reliability Criteria

Public Service Reliability Criteria

This section sites the PSCo System Performance Criteria for steady-state, transient stability and voltage stability simulations for planning events established in Table 1 of the NERC Standard TPL-001-4 and WECC Regional Criterion TPL-001-WECC-CRT-3.

Thermal Violation (Overload) Criteria

Thermal violations requiring corrective actions are identified in steady-state simulations for:

- No contingency (P0), single contingency (P1, P2-1) and two overlapping single contingency (P6) planning events by using the seasonal normal (continuous) facility rating of overhead/underground transmission lines as well as transformers;
- Multiple contingency (P2 to P5 and P7) planning events by using the seasonal normal (continuous) facility rating of overhead transmission lines and the short-duration (or emergency) facility rating of transformers and underground transmission lines.

Elements with thermal loading >100% of applicable seasonal facility rating are identified as facilities requiring overload mitigation.

Steady State Voltage Limit Violation Criteria

These criteria are the same as that specified in WR1, parts 1.1.1 and 1.1.2 in the WECC Regional Criterion TPL-001-WECC-CRT-3.

Voltage violations requiring corrective actions are identified in steady-state simulations when steady-state voltages at PSCo (EHV and HV) BES buses are outside the following acceptable voltage limits:

Normal (no contingency) conditions: Vmin = 0.95 pu, Vmax = 1.05 pu
Post-contingency conditions: Vmin = 0.90 pu, Vmax = 1.10 pu

The screening criterion for generator voltage ride through capability is 0.90 pu to 1.10 pu for all planning event (P1 to P7) contingencies (R3.3.1.1). If the initial screening simulation indicates that the generator bus voltage is outside this range, follow up simulations are performed as necessary based on a review of the generator's actual voltage ride through capability.

Post-Transient Voltage Deviation Criteria

These are the same as specified in WR1, part 1.2 in the WECC Regional Criterion TPL-001-WECC-CRT-3.

Transient Voltage Response (Dip) Criteria

These are the same as specified in WR1, parts 1.3, 1.4 and 1.5 in the WECC Regional Criterion TPL-001-WECC-CRT-3.

Voltage Stability Criteria

These are the same as specified in WR5 of WECC Regional Criterion TPL-001-WECC-CRT-3.
CCPG, and thereby PSCo, has translated WR5 to the following acceptable real power (MW) margins to the voltage instability threshold (such as the nose of P-V curve).
Category P0-P1 Events = 5%,
Category P2-P7 Events = 2.5%, and
Extreme Events = 0%

Transient Stability Criteria

This comprises of two transient (dynamic) response criteria – acceptable angular stability of generating units (per R4.1.1 and R4.1.2) and acceptable damping of power oscillations (per R4.1.3). CCPG, and thereby PSCo, has adopted the following.

Category P1 Event: No generating unit exhibits angular instability (i.e., loss of synchronism) and the relative rotor angle (power) oscillations are characterized by positive damping (i.e., amplitude reduction of successive peaks) >5% within 30 seconds.

Category P2–P7 Events: Angular instability of one or more generating units may occur, provided any resulting power swing only trips the unstable generating unit(s) and does not trip any transmission facilities, thus preserving the BES stability. In addition, the relative rotor angle (power) oscillations are characterized by positive damping (i.e., amplitude reduction of successive peaks) >5% within 30 seconds.

Note that the positive damping criterion is the same as that specified in WR1, part 1.6 in the WECC Regional Criterion TPL-001-WECC-CRT-3.

Cascading and/or Uncontrolled Separation/Islanding Identification Criteria

CCPG, and thereby PSCo, has adopted the following.

A potential triggering event for Cascading will be investigated upon one of the following results:

a) A generator pulls out of synchronism in transient stability simulations. Loss of synchronism occurs when a rotor angle swing is greater than 180 degrees. Rotor angle swings greater than 180 degrees may also be the result of a generator becoming disconnected from the BES; or

b) A transmission element experiences thermal overload that exceeds its transmission relay loadability limit; or

c) Negative voltage stability margin.

PSCo Facility Rating Methodology

Xcel Energy

Transmission

Facility Rating Methodology

Version 13.0

January 1, 2020

Objective

The objective of this document is to describe the methodologies employed when determining the ratings of transmission facilities on the Xcel Energy Bulk Electric Transmission Systems. The rating methodology includes both Normal and Emergency Ratings. For tables of equipment ratings and example calculations please refer to the Xcel Energy Rating Methodology Supplement. The Supplement is not considered part of the Rating Methodology, because all information pertaining to the method of the calculation is included in the Rating Methodology. The Supplements are in two parts; there are Excel Spreadsheets, which contain tables of calculated ratings, along with word documents explaining the development of the Rating Methodology and example calculations. Xcel Energy is currently developing software to calculate all bulk electric system facility ratings as the primary system. Once the published facility ratings are created with the software, the Supplement tables and example calculations will be secondary.

The Xcel Energy Bulk Electric Transmission Systems includes the combined Northern States Power Company Minnesota and Northern States Power Company Wisconsin (NSPM and NSPW) Transmission System, Public Service Company of Colorado (PSCo) Transmission System, and the Southwestern Public Service (SPS) Transmission Systems.

General Information

- **Updates**

  Once a revised Facility Rating Methodology has been approved, Xcel Energy will review and update rating information and issue new ratings (if needed) within 18 months.

- **Facility Ratings**

  The Facility Rating shall respect the most limiting applicable Equipment Rating of the individual equipment that comprises that Facility. Ratings of the equipment that comprise the Facility shall be consistent with at least one of the following:

  - Ratings provided by equipment manufacturers or obtained from equipment manufacturer specifications such as nameplate rating.
  - One or more industry standards developed through an open process such as Institute of Electrical and Electronics Engineers (IEEE) or International Council on Large Electric Systems (CIGRE).
  - A practice that has been verified by testing, performance history or engineering analysis. The equipment shall include, but not be limited to, transmission conductors, transformers, relay protective devices, terminal equipment, and series and shunt compensation devices. The rating for each individual piece of equipment considers the (a) Equipment Rating standard(s) used in development of this methodology; (b) Ratings provided by equipment manufacturers or obtained from equipment manufacturer specifications; (c) Ambient conditions (for particular or average conditions or as they vary in real-time); and (d) Operating limitations; in accordance with good utility practice. Operational limitations may result in a de-rating based on good utility practice. The Facility Rating will include both Normal and Emergency Ratings.

  Xcel Energy develops a 30-minute emergency facility rating for all Transmission Lines. The emergency rating timeframes available for transformers are published in the Criteria for Power Transformer Loading. IEEE equipment standards have varying time frames for equipment emergency ratings. If the emergency rating developed for a piece of equipment is for a longer duration than that of the reported rating, then the equipment's emergency rating is utilized in determining the Facility's Emergency Rating. For example, it is acceptable to use a switch's four-hour emergency rating when determining the 30-minute emergency rating of a transmission line. However, when the duration of an emergency rating of a piece of equipment is less than the duration of the rating being reported, then the equipment's normal ratings will be utilized. For example, it is not acceptable to use a switch's 4-hour emergency rating when determining the 8-hour emergency rating for a transformer facility. Instead, the switch's normal continuous rating will be used in determining the 8-hour emergency rating for the transformer facility.

- **Transmission Line Facility Ratings**

  When developing a Transmission Line Facility Rating, the set of equipment that comprises the Facility includes:

  a. The transmission line.

b. All of the equipment that is used to operate or disconnect the line and operated as part of the line. This includes, but is not limited to adjacent circuit breakers, disconnect switches, conductor, relays, and meters that as a result of switching could be operated in series with the line.

The Transmission Line Facility Rating is calculated as the minimum rating of the equipment described above.

- **Transformer Facility Ratings**

When developing a Transformer Facility Rating, the set of equipment that comprises the Facility includes:

a. The transformer equipment.

b. All of the equipment that is used to operate or disconnect the transformer and operated as part of the transformer. This includes, but is not limited to adjacent circuit breakers, disconnect switches, conductor, relays, and meters that as a result of switching could be operated in series with the transformer.

The Transformer Facility Rating is calculated as the minimum rating of the equipment described above.

- **SPP, WECC and MRO**

  Where SPP, WECC and MRO have requirements for facility ratings, the more conservative rating should be used.

- **Jointly-Owned Facilities**

  Equipment ratings on Jointly-Owned facilities will be communicated between the owners. The Jointly-Owned Facility Rating shall equal the most limiting applicable Equipment Rating of the individual piece(s) of equipment that comprise the Jointly-Owned Facility.

  In cases where a facility is owned in segments (such as a line terminal being owned by one party and the line conductor by another party), Xcel Energy rates only those portions of the line/terminal/transformer that it owns and provides that information to the owner(s) of the other segment(s). Xcel Energy takes into account rating data provided by the owner(s) of the other segment(s) of the line or transformer, and applies the most limiting rating as the Facility Rating.

- **Conservative Ratings**

  A limited number of pieces of equipment may not have all the information necessary for developing an equipment rating. However, in order to provide system ratings, a conservative rating may be applied to this equipment. The conservative rating for the equipment must be documented in the equipment attributes. Conservative ratings are defined as those, which produce an ampacity on the low end of the possible range for that equipment and are based upon engineering judgment. A Rating Exception Form must be on file for all conservative ratings developed.

- **Default Ambient Temperature**

Design Ambient Temperature	NSP	PSCo	SPS
Summer Ambient Design Temperature	40 °C 104 °F	40 °C 104 °F	40 °C 104 °F
Winter Ambient Design Temperature (used for winter peaking circuits – these circuits peak at very low temps)	0 °C 32 °F	24 °C 75 °F	27 °C 81 °F

For elevations greater than or equal to 5500 feet in the PSCo region, ambient temperatures in the following table may be used for calculating ampacity of conductors & equipment.

Elevation (feet)	Summer Ambient Design Temperature	Winter Ambient Design Temperature
5500-6000	40°C = 104°F	24°C = 75°F
6001-6500	39°C = 101°F	24°C = 75°F
6501-7000	37°C = 99°F	24°C = 75°F
7001-7500	36°C = 97°F	24°C = 75°F
7501-8000	35°C = 95°F	23°C = 73°F
8001-8500	34°C = 93°F	22°C = 71°F
8501-9000	33°C = 91°F	21°C = 69°F
9001-9500	32°C = 89°F	20°C = 67°F
9501-10000	30°C = 87°F	19°C = 66°F
>10001	29°C = 85°F	18°C = 64°F

The Winter Operating Seasons are:

- December 1 – March 1 for NSPM and NSPW
- November 1 – March 31 for PSCo
- December 1 – March 31 for SPS

Ambient temperature assumptions are used for standards that do not state assumptions.

- **Ambient-Adjusted Ratings**

Ambient-Adjusted Ratings may be used for real-time operations and near-term planning; however, long-term planning should not rely on Ambient-Adjusted Ratings. Typically, these ratings will rely on weather parameters for ambient temperature but may also be based on wind speed or other ambient-based parameters. In real-time operations, these ambient parameters will be obtained from local meteorological stations or from the weather service in the vicinity of the affected facility. In the case where facilities cross areas of differing weather conditions, the more conservative values will be utilized.

Once the ambient parameters are known, the Ambient-Adjusted Rating for one or more elements of the Facility may be determined by various methods. A few of the common methods are listed but other methods may be used.

- Recalculated Ambient Adjusted Rating tables
- Standalone program utilizing comparable rating calculation

- EMS dynamic rating feature
- Line monitors

If Ambient-Adjusted Ratings are applied to some but not all elements of a Facility, then the normal seasonal ratings are to be used for those elements, which do not have an Ambient-Adjusted Rating when determining the overall Facility rating.

The Ambient-Adjusted Ratings are not to exceed the maximum published facility rating unless a detailed review of relay settings is completed.

- **Operational Guidelines**

  Operating Guidelines may be utilized in cases where recent field verification has identified a potential discrepancy in the assumptions used to determine the rating of an element and the resulting facility de-rate would result in significant risk to the operation of the transmission system. These Operating Guidelines will be temporary, with the assumption that once the resulting remediation project is complete, then the Operating Guideline will be removed and the calculated rating will be implemented.

Transmission Line Rating Methodology

Xcel Energy uses the IEEE 738-2006 standard for calculating bare overhead conductor ratings. Xcel Energy will use the lesser of the Conductor Maximum Operating Temperature and the Clearance/Hardware thermal limits for conductor operating temperature in the IEEE 738-2006 calculation. The remainder of this section lists assumptions.

- **Conductor Maximum Operating Temperature**

  Xcel Energy adheres to the following table for maximum operating temperature of its conductors. The table shows normal and emergency limits.

Conductor type	Normal (Operating Temperature)	30 Minute Emergency Rating
ACSR*	100 °C	Normal Rating X 110%
ACAR	100 °C	Normal Rating X 110%
AAC	100 °C	Normal Rating X 110%
Cu	95 °C	Normal Rating X 110%
Copper Weld	95 °C	Normal Rating X 110%
ACCC	180 °C	200 °C
ACSS	200 °C	250 °C
SCACAR	100 °C	Normal Rating X 110%
ACCR	210 °C	240 °C
ZTACSR	210 °C	240 °C

  *ACSR may be permitted to run at higher temperatures see “General Guidelines when considering up-rating ACSR beyond 100 degrees C” in Rating Methodology Supplement.

- **Permitting/Other**

  Conductor may be rated below the maximum operating temperature listed in section 7.1 for the following reasons:

  - Permitted ROW agreements (ex. railroad or waterway crossing).
  - Ampacity (ex. NESC clearance limitation).
  - EMF calculations.

- **Clearance/Hardware Limit**

  The Clearance/Hardware thermal rating of a transmission line is the maximum temperature, (regardless of the current) which a conductor can attain without violating code-mandated clearances or damaging temperature limited hardware. Short-term limitations due to clearance restrictions will be considered on a case by case basis.

- **Remaining Assumptions**

Variables	NSP – Assumption	PSCo – Assumption	SPS – Assumption
Conductor properties	Southwire Overhead Conductor Manual 2nd Edition and other various sources	Southwire Overhead Conductor Manual 2nd Edition and other various sources	Southwire Overhead Conductor Manual 2nd Edition and other various sources
Cooling Wind	Maximum of 4 ft/sec @ 90deg to conductor *	Maximum of 4 ft/sec @ 90deg to conductor	Maximum of 6 ft/sec @ 90deg to conductor
Elevation	Actual Elevation (or use default of 1100')	Actual Elevation (or use default of 5200')	Actual Elevation (or use default of 3700')
Emissivity	0.5	0.5	0.5
Absorptivity	0.5	0.5	0.5
Latitude	Actual Latitude (or use default of 43°N)	Actual Latitude (or use default of 40°N)	Actual Latitude (or us default of 35°N)
Summer Day Solar Calc	172	172	172
Winter Day Solar Calc	90	90	90
Time of Day	12:00 PM	12:00 PM	12:00 PM
Orientation of Line	Actual Orientation (or use default of East to West)	East to West	East to West
Atmosphere	Clear	Clear	Clear

***Excludes Buffalo Ridge Wind Rated Lines**

- **CAPX Assumptions**

  CapX2020 is a joint initiative of 11 transmission-owning utilities in Minnesota and the surrounding region to construct region transmission lines. These lines are to be owned jointly as a percentage share in the line. The following assumptions have been agreed upon by the utilities for rating calculations.

Variables	CAPX2020 – Assumption
Conductor properties	Southwire Overhead Conductor Manual 2nd Edition and other various sources
Cooling Wind	2 ft/sec @ 90deg to conductor
Emissivity	0.7
Absorptivity	0.9
Summer Day Solar Calc	July 8th
Winter Day Solar Calc	April 30th
Time of Day	12:00 PM
Orientation of Line	East to West
Atmosphere	Clear

- **Buffalo Ridge Wind Rated Lines**

  A few transmission lines in southwestern Minnesota that provide outlet to wind generators have a rating based on a higher wind speed than is typical throughout the rest of the NSP system. Higher output from the wind generators is only available during the time periods where the wind speed is higher than used in normal transmission line ratings. Thus a higher wind speed was used to rate these lines. The higher wind speed was approved at the time of development by the Design Review Subcommittee of the then existing NERC Reliability Region “Mid-Continent Area Power Pool” (“MAPP”).

  The transmission line circuits in the NSP Transmission System with wind ratings are the following 115kV lines: Split Rock-Pipestone and Chanarambie-Pipestone.

- **Underground Lines**

  Underground lines have been and will be rated on an individual basis using engineering analysis. The ratings are developed and based on the soil conditions, conductor type, and installation methods.

  Underground cable and the associated terminators are engineered as a system and the ampacity rating is determined for the system. The ampacity rating provided for underground cable and terminator systems shall equal the most limiting element of the system.

Transmission Line Equipment Rating Methodology

- **Line Switches**

  The line switch ratings are based on the manufacturer's assigned nameplate rating and ACCC designation. The maximum ampacity to operate the switch is based on the IEEE C37.37 loading guide.

- **Line Jumpers**

  The rating methodology for line jumpers is the same as that used as for Xcel Energy's Transmission Lines, which references IEEE STD. 738. The ratings communicated for transmission lines will represent the rating of the line including all jumpers in the line. If the rating of a jumper is the limiting equipment in a line, then the rating of the line will be limited to the jumper rating.

  Jumpers between transmission lines and the substation equipment should be rated per the transmission line rating methodology unless restricted by the equipment or hardware that the jumper is attached to.

- **Hardware**

  Hardware for transmission lines is temperature limited and is designed for the operating temperature of the line. The equipment manufacturer provides hardware ratings.

Transmission Substation Equipment Rating Methodology

Transmission Substations are comprised of several pieces of equipment. Each piece of equipment is identified below along with its ratings methodology.

The following diagrams are to be used as reference for the Substation Equipment Rating Methodology.

- **Substation Rating Diagrams**

SUBSTATION RATING DIAGRAM

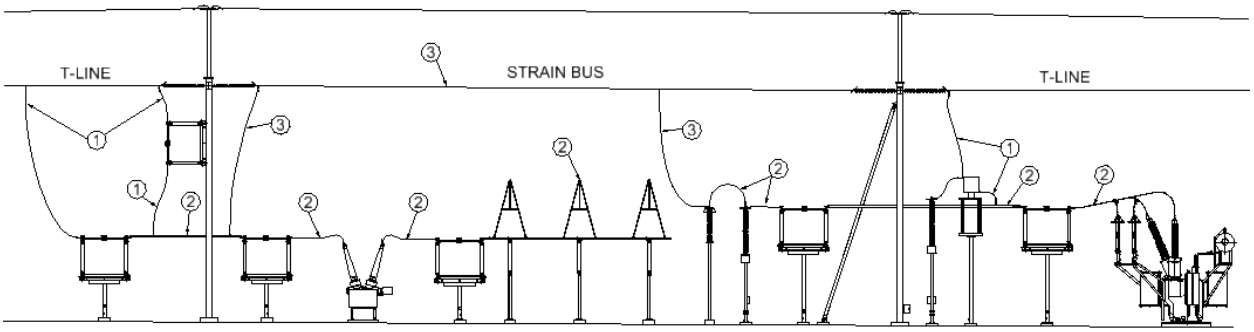

① T-LINE TO SUBSTATION EQUIPMENT - RATE ONLY FLEXIBLE CONDUCTORS PER *TRANSMISSION LINE RATING METHODOLOGY* SECTION;
DERATE CONDUCTORS WHEN CONNECTED DIRECTLY TO:

DEVICES WITH BUSHINGS	-	NORMAL 85°C	EMERGENCY 100°C,
LINE TRAPS	-	NORMAL 135°C	EMERGENCY 135°C,
SWITCHES	-	NORMAL 200°C	EMERGENCY 200°C;

ALL CONDUCTORS' RATINGS SHALL FOLLOW *CONDUCTOR MAXIMUM OPERATING TEMPERATURE* TABLE.

② SUBSTATION OR STRAIN BUS TO TUBE, BUSHING OR EQUIPMENT:

ALL CONDUCTORS	-	NORMAL 85°C	EMERGENCY 100°C

③ REFER TO THE CRITERIA UNDER *BUS CONDUCTORS AND EQUIPMENT JUMPERS* SECTION TO DETERMINE WHETHER SUBSTATION OR TRANSMISSION RATING METHODOLOGY IS APPLICABLE.

- **Bus Conductors and Equipment Jumpers**

The rating methodology is as outlined in IEEE Standard 605 for tubular bus and IEEE Standard 738 for wire bus and jumpers. Assumptions made for conductors are as follows:

Variables used for Bus Conductor (Tube, Wire & Jumpers) Ampacity Calculations			
Variables	**NSP**	**PSCO**	**SPS**
Summer Ambient Temperature (Deg. C)	See Default Ambient Temperature under General section		
Winter Ambient Temperature (Deg. C)			
Emissivity Outdoors(e)	0.5	0.5	0.5
Emissivity Indoors(e)	0.35	N/A	N/A
Absorptivity (a)	0.5	0.5	0.5
Degrees North Latitude	Actual (or 43)	Actual (or 40)	Actual (or 35)
Time	12	12	12
Atmosphere	Clear	Clear	Clear
Elevation (ft.)	Actual (or 1100)	Actual (or 5900)	Actual (or 3700)
Wind Speed (ft./S) – indoor	0	0	0
Wind Speed (ft./sec.) - enclosed substation	2	2	2
Wind Speed (ft./sec.) - open substation	4	4	6
Wind Direction Factor (deg.)	90	90	90
Azimuth of Conductor (deg.)	90	90	90
Day of the year - Summer (Variable N from IEEE 738)*	172	172	172
Day of the year - Winter (Variable N from IEEE 738)*	90	90	90

*No solar heat gain for indoor conductors

All tube and bare overhead conductors inside the substation will have a normal rating of 85° C and an emergency four hour rating of 100° C. Jumpers between transmission lines and the substation equipment should be rated per the transmission line rating methodology unless restricted by the equipment or hardware that the jumper is attached to. Strain bus consisting of bare overhead conductor may be rated per the Transmission Line Rating Methodology if all of the following are true:

1. The strain bus is considered an extension of the transmission line due to the fact that one end of the strain bus terminates on the transmission line dead-end structure.
2. The strain bus terminations inside the substation are at the same height as or higher than the transmission line termination into the substation or minimum conductor ground clearance greater than 25 feet above surface grade.
3. The strain bus is in an open substation and is expected to be exposed to the same wind speed as the transmission line.
4. Structures and hardware used to install the strain bus are rated for the maximum conductor temperature and tension as outlined by the Transmission Line Rating Methodology.
5. Clearances to ground and other substation equipment can be maintained at maximum sag based on company standards when designed.

Connectors and terminations used on substation conductors will be given a rating equal to that of the conductor to which they are attached. Therefore, the ratings communicated for substation conductors will include the rating of the conductor itself as well as the connectors and terminations connected to it.

- **Proximity Effect of Conductors**

  Conductors spaced less than six inches apart are subject to reductions of capacity due to proximity effect. Xcel Energy has used Engineering Analysis to develop proper ratings for these conductors. Xcel Energy has developed ratings on these conductors based on three sources. "Skin Effect and Proximity Effect in Tubular Conductors", "Skin Effect in Tubular and Flat Conductors," and "Bessel Functions for A-C Problems" were used in formulating the calculation.

- **Circuit Breakers, Circuit Switchers, and Line-Switchers**

  The rating methodology is as outlined in ANSI/IEEE C37.010**.** Breakers pre 1964 utilize a 55 degree C Hot Spot temperature rise and 1964 – present utilize a 65 degree C Hot Spot temperature rise.

- **Disconnect Switches**

  The rating methodology is as outlined in ANSI/IEEE C37.30 and ANSI/IEEE C37.37**.** Xcel Energy has contacted switch manufacturers about connecting conductors, which will operate at 200°C to switch pads. The manufacturers have provided test data and have stated that this will not adversely affect the operation of the switches.

- **Transformers**

  The rating methodology is as outlined in ANSI/IEEE C57.12.00. Loading/rating for loading above transformer nameplate is in accordance with ANSI/IEEE C57.91. The ratings for transformers are determined by the Criteria for Power Transformer Loading.

- **Current Transformers (CT's)**

  The overload capacity of a Current Transformer (CT) is determined by its continuous thermal rating factor (RF). The continuous thermal rating factor is defined in IEEE C37.110. The maximum secondary current of a CT is the rated value of the CT secondary*RF or as limited by other elements in the circuit.

  $Itap = Itap_r * RF$

  Itap = adjusted rated continuous current of specific CT tap under consideration

  $Itap_r$ = rated continuous current of tap

  RF = Continuous thermal rating factor (Manufacturer should be consulted for value of continuous current rating factor. Assume 1 if not available.)

  - **Autotransformer neutral winding CTs**

    CTs on the neutral winding of an autotransformer do not experience the same current flows as the H or X windings. The method of calculating the flow in the common winding uses the following formula:

$$CommonWindingAmps = \frac{TopRating(KVA)}{\sqrt{3} * V_{lowside}(kV)} - \frac{TopRating(KVA)}{\sqrt{3} * V_{highside}(kV)}$$

This formula is applied to find the amperage flowing through the common winding when the transformer is operating at its top rating.

- **Power Apparatus Bushings**

  This section applies to power apparatus bushings as defined by IEEE C57.19.00 that have basic impulse insulation levels of 110 kV and above for use as components of oil-filled transformers and oil-filled reactors. Bushings supplied with other equipment will be rated using the same methods as the equipment they are attached to.

  Bushings can be loaded up to their specified ampere rating. The overload rating of the equipment on which the bushing is installed could be limited by the bushing ampere rating. If the bushing rating cannot be confirmed by name plate or contacting manufacturer, the equipment will be rated at its nameplate rating or calculated rating with no overload. However, if the equipment was specified to have an overload rating, or if the equipment manufacture has documented an overload rating, this overload rating may be used.

- **Line Traps**

  The terms Line Traps and Wave Traps are used interchangeably throughout this document.

  The ratings methodology for the wave trap is according to IEEE Std C93.3-2017 The wave trap allows for loadability to change due to ambient temperature and emergency operating conditions. The maximum terminal temperature for a wave trap is 135 degrees C. Altitude derating factors in C93.3-2017 include an elevation adjustment with a lower mean (24 hour) maximum temperature. Line traps should therefore not be ambient adjusted per the elevation table in section 6.8 above.

- **Shunt Reactors**

  The ratings methodology for shunt reactors (oil filled) is according to ANSI/IEEE C57.21. There is no emergency or overload rating for shunt reactors. Shunt reactors may be operated up to 105% of the rated voltage.

- **Shunt Capacitors**

  IEEE standard 18 specifies the technical requirement of individual capacitor units and IEEE 1036 provides the application guidelines for shunt capacitor banks.

- **Series Capacitors**

  All series Capacitors will be rated per manufacture specifications for normal and emergency conditions.

- **SVC (Static Var Compensators)**
  SVC's will be rated per the manufacturers recommended ratings for normal and emergency conditions.

- **DC Tie Equipment**
  DC Tie equipment will be rated per the manufacturers recommended ratings for normal and emergency conditions.

- **GIS Equipment**
  All Gas Insulated Substation (GIS) equipment will be rated per manufacture specifications for normal and emergency conditions.

- **Protective Relay & CT Secondary Devices**
  All secondary devices will be operated within their specified manufacturer limits. If the rating for a secondary device cannot be determined then assume the rating is 5 amps.

  Protective relay settings on all equipment in the bulk electric transmission system should be designed and set to permit the emergency loading of equipment per NERC standard PRC-023 where applicable. PRC-023 shall be followed with respect to any settings that may affect facility ratings.

  The over-current relays on the transmission lines used for "switch-onto-fault" should be designed and set above the maximum loading of the line.

  Over-current relays on transformers should be designed and set above the maximum emergency loading.

PSCo Load Forecast Information

This filing is based on the Summer 2018 PSCo Load Forecast, which was provided publicly in the Company's 2016 Electric Resource Plan Annual Progress Report filed dated October 31, 2018 (Proceeding No. 16A-0396E). The details of the Summer 2018 PSCo Load Forecast are shown in Table 1. Table 2 shows the PSCo Load Forecast that was provided publicly in the Company's 2016 Electric Resource Plan Modeling Assumptions Update filed in August 2017 Table 3 highlights the differences between these two forecasts. The Company notes that while it has developed more recent load forecasts (e.g., as provided in the Company's 2016 Electric Resource Plan Annual Progress Report dated October 2019), the Summer 2018 forecast was the most current publicly available forecast at the time the Company began the analysis and preparation of this Rule 3627 Report.

The Summer 2018 Native Load Forecast is within (100) MW of the previous forecast through 2022. The primary driver of the lower forecast through this period is a lower Residential Base forecast (lines 1, 13, and 25). Beyond 2022, Summer 2018 Native Load Forecast shows a sharper decline of more than 200 MW when compared to the prior forecast. The main driver of the larger declines is the exclusion of the additional 107 MW of Oil and Gas Load that was included in the Summer 2017 Forecast (lines 6, 18, and 30). Additionally, the Non-Residential Base forecast shows larger changes compared to the previous forecast starting in 2023. Other assumption changes between the two forecasts include higher DSM impacts, a slower pace of solar adoption, and the inclusion of Integrated Volt Var Optimization (IVVO) and electric vehicle (EV) load.

Table 1: PSCo Demand Forecast (Summer 2018 Update) — **Summer 2018**

		2019	2020	2021	2022	2023	2024	2025	2026	
1	Res Base Forecast	2,531	2,563	2,576	2,605	2,626	2,650	2,667	2,702	
2	Non-Res Base Forecast	3,567	3,562	3,575	3,588	3,594	3,601	3,609	3,625	
3	DSM Forecast	(11)	(18)	(24)	(31)	(37)	(44)	(50)	(57)	
4	EV's Forecast	3	8	14	19	26	29	29	29	
5	IVVO Forecast	5	11	23	33	44	43	43	43	
6	Oil&Gas Forecast	-	-	-	-	-	-	-	-	
7	Solar Forecast	158	180	200	221	241	260	280	300	
8	**Retail Forecast**	**5,950**	**5,960**	**5,966**	**5,989**	**5,999**	**6,020**	**6,033**	**6,070**	*8 = 1 + 2 - 3 + 4 - 5 + 6 - 7*
9	Wholesale Forecast	530	551	550	564	577	591	603	615	
10	**Summer 2018 Forecast**	**6,480**	**6,511**	**6,517**	**6,553**	**6,576**	**6,611**	**6,635**	**6,685**	*10 = 8 + 9*
11	Solar Forecast	158	180	200	221	241	260	280	300	
12	**PSCo Native Load Forecast - Summer 2018 (MW)**	**6,638**	**6,690**	**6,717**	**6,773**	**6,817**	**6,871**	**6,916**	**6,985**	*12 = 10 + 11*

Table 2: Phase II PSCo Demand Forecast (from August 2017 ERP Phase II Updated Assumption Filing) — **Summer 2017**

		2019	2020	2021	2022	2023	2024	2025	2026	
13	Res Base Forecast	2,564	2,604	2,628	2,655	2,677	2,702	2,724	2,750	
14	Non-Res Base Forecast	3,562	3,566	3,577	3,591	3,624	3,661	3,672	3,681	
15	DSM Forecast	(21)	(28)	(35)	(42)	(49)	(56)	(63)	(71)	
16	EV's Forecast	-	-	-	-	-	-	-	-	
17	IVVO Forecast	-	-	-	-	-	-	-	-	
18	Oil&Gas Forecast	-	-	-	-	107	107	107	107	
19	Solar Forecast	196	230	265	300	336	372	409	446	
20	**Retail Forecast**	**5,950**	**5,968**	**5,975**	**5,988**	**6,121**	**6,154**	**6,157**	**6,162**	*20 = 13 + 14 - 15 + 16 - 17 + 18 - 19*
21	Wholesale Forecast	525	535	552	559	572	585	597	610	
22	**Summer 2017 Forecast**	**6,475**	**6,503**	**6,527**	**6,547**	**6,693**	**6,739**	**6,754**	**6,772**	*17 = 15 + 16*
23	Solar Forecast	196	230	265	300	336	372	409	446	
24	**PSCo Native Load Forecast - Summer 2017 (MW)**	**6,671**	**6,733**	**6,792**	**6,846**	**7,029**	**7,111**	**7,163**	**7,218**	*19 = 17 + 18*

Table 3: PSCo Demand Forecast (Current less Phase II) — **DELTA**

		2019	2020	2021	2022	2023	2024	2025	2026
25	Res Base Forecast	(33)	(41)	(51)	(50)	(51)	(52)	(57)	(48)
26	Non-Res Base Forecast	5	(4)	(3)	(3)	(29)	(60)	(63)	(55)
27	DSM Forecast	9	10	11	11	12	13	13	14
28	EV's Forecast	3	8	14	19	26	29	29	29
29	IVVO Forecast	5	11	23	33	44	43	43	43
30	Oil&Gas Forecast	-	-	-	-	(107)	(107)	(107)	(107)
31	Solar Forecast	(38)	(50)	(64)	(79)	(95)	(112)	(129)	(146)
32	**Retail Forecast**	**(0)**	**(8)**	**(9)**	**1**	**(122)**	**(134)**	**(125)**	**(91)**
33	Wholesale Forecast	5	16	(2)	5	6	6	6	5
34	**PSCo System Load Forecast**	**5**	**8**	**(11)**	**6**	**(116)**	**(128)**	**(119)**	**(86)**
35	Solar Forecast	(38)	(50)	(64)	(79)	(95)	(112)	(129)	(146)
36	**PSCo Native Load Forecast (MW)**	**(33)**	**(42)**	**(75)**	**(73)**	**(211)**	**(240)**	**(248)**	**(232)**

Northern Greeley Area Transmission Plan

System Impact Study Report

Northeast Colorado (NECO) Subcommittee

Analysis Performed and Prepared by:
Public Service Company of Colorado
Transmission Planning

February 3, 2017
Accepted by CCPG on February 16, 2017

Executive Summary

The transmission system in and around the City of Greeley is experiencing reliability issues due to aging transmission infrastructure, increasing customer demand for electricity, and resource capacity constraints. This system is primarily owned and operated by Public Service Company of Colorado (PSCo). In response to these issues, and to develop a transmission improvement plan for the area, PSCo participated in a joint study conducted through a subcommittee of the Colorado Coordinated Planning Group (CCPG). The Northeast Colorado (NECO) Subcommittee was formed by CCPG to develop a transmission plan in northeast Colorado that would improve reliability, increase load serving capability and resource accommodation, and align with other transmission planning efforts in the area. In 2016, the NECO Subcommittee focused on transmission plans to the north of Greeley and developed this "Northern Greeley Area Transmission Plan".

The primary objective of this transmission plan is to replace the existing, antiquated and non-standard, 44 kV system with higher voltage transmission facilities. The existing loads, which are served radially from the 44 kV transmission system, will be transferred to the higher voltage network, which will be configured in a more reliable interconnected (or looped) manner.

The load serving capability of the region is also an important consideration since Weld County produces more oil and gas than any other county in the state of Colorado. Utilities in the county have received a significant number of interconnection requests to serve oil and gas loads. These requests include not only those for new electrical service, but also those that desire a change from traditional gas-powered equipment to more efficient electrical equipment.

Northeast Colorado also has a high potential for beneficial resource development, such as renewables. The area is located within what has been defined as Energy Resource Zone (ERZ) #1 as identified by Colorado Senate Bill 07-100. Within ERZ #1 there are three identified wind Generation Development Areas (GDA's), each located north of the Greeley area. There are currently 1,275 MW of developed wind resources located in the region and the potential exists for significant additional renewable generation development.

In June 2016, the NECO Subcommittee developed a study scope and began evaluating alternatives, leading to the development of this coordinated transmission plan. The study results indicate that replacing the 44 kV system with a new 230/115 kV transmission network in the northern Greeley area will not only improve reliability, but also serve new customer load requests, and allow for the accommodation of potential new resources.

The study specifically indicates the Northern Greeley Area Transmission Plan successfully mitigates potential overloads for both system intact and contingency conditions. The plan will transfer almost 70 MW of existing loads from the 44 kV radial transmission system to a new higher voltage system, and allows for at least 120 MW of new load to be added to the area. The plan also adds another transmission outlet to the constrained transmission path south of the Ault substation, which in turn increases the system operating limit . The plan allows for future generation resource accommodation and aligns with other transmission planning efforts in northeast Colorado.

The proposed "Northern Greeley Area Transmission Plan" would establish over 25 miles of new 230 kV and 115 kV transmission from the existing jointly-owned Ault Substation to a new Cloverly Substation,

add two new load serving substations and expand on a third substation for a cost of approximately $64.5 million dollars. The Northern Greeley Area Transmission Plan includes the following components:

- Ault – Husky 230 kV Transmission Line: A new 6-mile transmission line built from the Western Area Power Administration (Western) Ault Substation to a new "Husky" Substation, located near the existing PSCo 44 kV Ault Substation. The transmission would initially be operated as single-circuit 230 kV, but may be built with the capability to accommodate two 230 kV circuits.
- Husky Substation: The Husky Substation is planned to replace the existing PSCo Ault 44 kV Substation. The substation would allow 44 kV loads to be transferred to 115 kV and accommodate future load interconnection requests.
- Husky – Graham Creek – Cloverly 115 kV Line: A new 19-mile transmission line built from the Husky Substation, having an intermediate interconnection to a new "Graham Creek" Substation, and terminating at the Cloverly Substation. The transmission would initially be operated as single-circuit 115 kV, but may be built with the capability to accommodate two 230 kV circuits.
- Graham Creek Substation: The Graham Creek Substation is planned to replace the existing PSCo Eaton 44 kV Substation. The substation would allow 44 kV loads to be transferred to 115 kV and accommodate future load interconnection requests.
- Cloverly Substation: The Cloverly Substation was completed by PSCo in 2016 and is an expansion of the existing PSCo Pleasant Valley 44 kV Substation in east Greeley. The substation can accommodate future load interconnection requests and provide flexibility to continue additional 115 kV or 230 kV transmission to the south.

Figure 1 below illustrates the proposed Northern Greeley Area Transmission Plan[1].

[1] Note that all of the maps in this report indicate general routing of transmission facilities and are not meant to depict any specific routes or locations for those facilities.

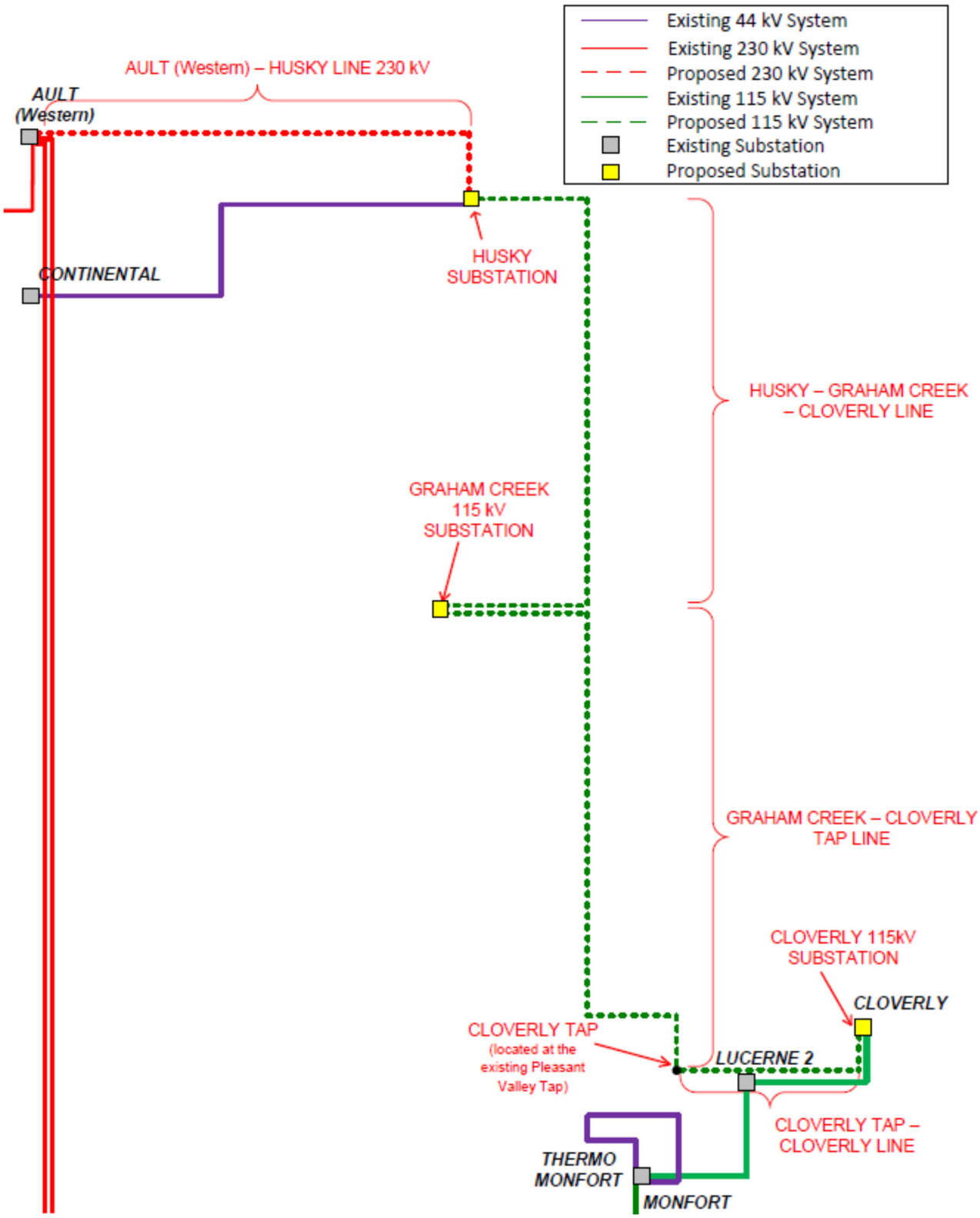

Figure 1: Northern Greeley Area Transmission Plan

I. Study Objective

The purpose of this study lays out the plan for a coordinated and joint transmission study effort to develop a transmission plan in and immediately north of the City of Greeley. The key objective of the transmission plan is the elimination of the existing, antiquated and non-standard, 44 kV system, and replacing it with higher voltage transmission facilities. Other objectives of the plan include ensuring system reliability, providing flexibility to accommodate future load growth and beneficial resource development, and aligning with other ongoing transmission projects and studies in northeast Colorado.

II. Stakeholder Process

The study was conducted through the Northeast Colorado (NECO) Subcommittee of the Colorado Coordinated Planning Group (CCPG). *"The Colorado Coordinated Planning Group (CCPG) is a joint, high voltage transmission system planning forum. The purpose is to assure a high degree of reliability in the planning, development and operation of the high voltage transmission system in the Rocky Mountain Region.[2]"* The objective of the NECO Subcommittee is to develop transmission plans that will support and facilitate load growth related to oil and gas development, coordinate with reliability improvements in the Greeley area, and complement other longer-term transmission plans in northeast Colorado. In 2016, the NECO Subcommittee focused on transmission plans in the northern Greeley area. This study was limited to the transmission system in northeast Colorado, commonly referred to as the "Foothills" area, which is primarily within Weld County, but also extends to Boulder and Larimer Counties. Specifically within the Foothills area, the study area expands east to west from Range 62 West to Range 70 West, and north to south from Township 7 North to Township 2 North. Figure 2 below shows a picture of the study focus area.

NECO Subcommittee Participants		
Name		Company
Dylan	Fate	Tri-State Generation and Transmission
Jeremy	Brownrigg	Platte River Power Authority
Paul	Caldara	Colorado Public Utilities Commission
Shawn	Carlson	Basin Electric Power Cooperative
Patrick	Corrigan	Xcel Energy
Jim	Farby	Black Hills Corporation
Roy	Gearhart	Western Area Power Administration
Tom	Green	Xcel Energy
David	Gustad	Tri-State Generation and Transmission
Joel	Hendrickson	Colorado Public Utilities Commission
James	Hirning	Western Area Power Administration
Ryan	Hubbard	Tri-State Generation and Transmission
Joe	Mercer	Peak Reliability Corporation
Betty	Mirzayi	Xcel Energy
Chris	Neil	Office of Consumer Council
Connie	Paoletti	Xcel Energy
Jason	Parker	Western Area Power Administration
Chris	Pink	Tri-State Generation and Transmission
Michael	Rein	Xcel Energy
Paul	Runanu	Western Area Power Administration
Charles	Shue	Black Hills Corporation
John P	Skeath	Xcel Energy
Wes	Wingen	Black Hills Corporation

[2] CCPG Charter, http://regplanning.westconnect.com/ccpg.htm

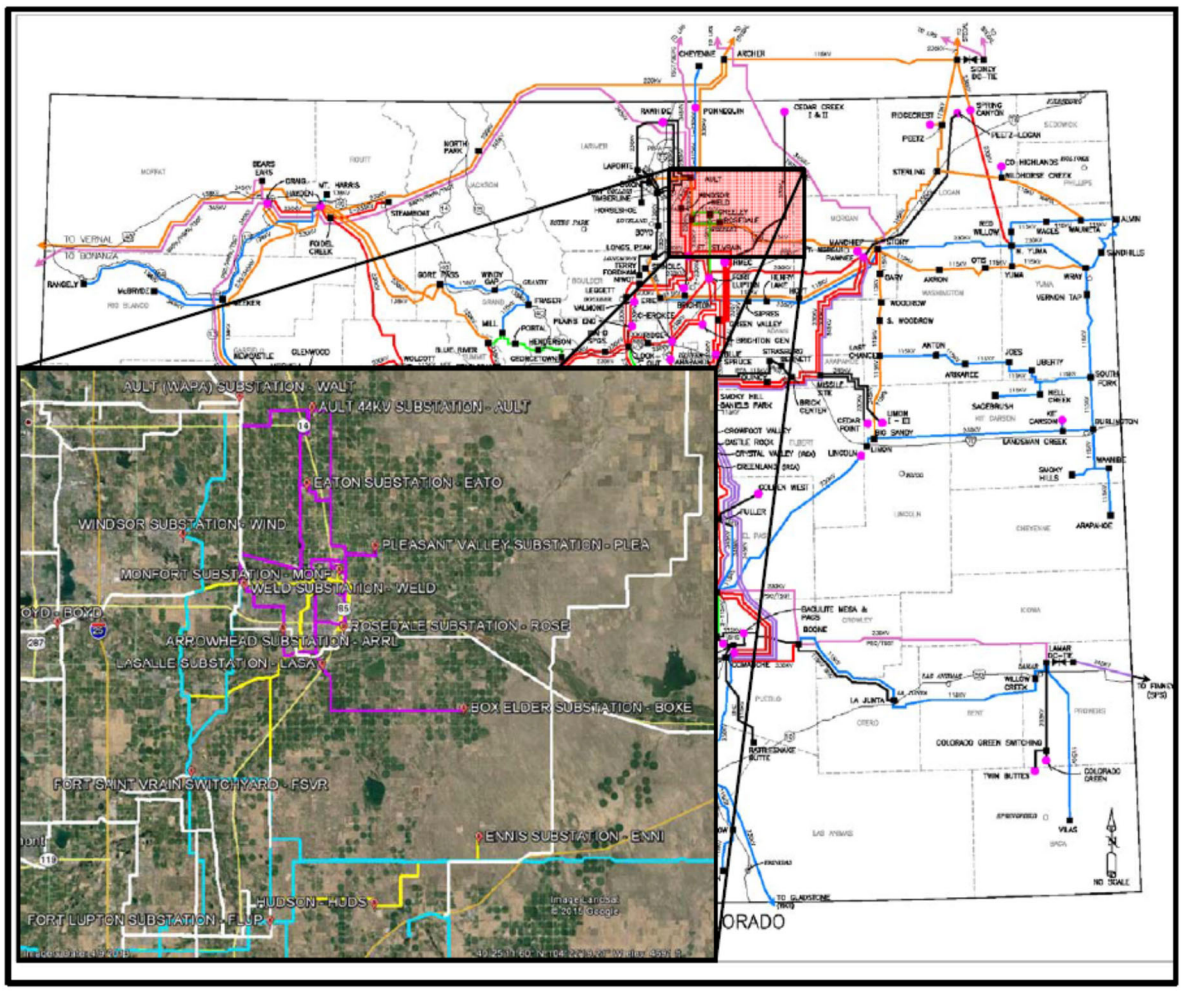

Figure 2: Study Focus Area

A kickoff meeting was held in the fall of 2015, and participation has been open to any interested stakeholders. To ensure transparency, meetings have been held regularly, generally on a monthly basis, and meeting materials are publically posted on the WestConnect web site, under the Northeast Colorado Subcommittee of CCPG[3].

The study scope and all alternatives, sensitivities and scenario studies were agreed to by the NECO Subcommittee participants. PSCo acted as the facilitator in the study effort, in both conducting and presenting studies and their results.

III. Background

In response to the aging and non-standard transmission infrastructure, capacity limitations due to increasing retail demand, and resource constraints, the NECO Subcommittee worked to develop a

[3] http://regplanning.westconnect.com/ccpg_neco_sc.htm

transmission improvement plan for the northern Greeley area to improve the reliability, load serving capability, resource accommodation and align with other ongoing transmission projects and studies in the Greeley area.

The Greeley Area 44 kV Transmission System

The Greeley area 44 kV transmission system is one of the oldest transmission assets owned by PSCo with significant portions of the infrastructure dating back to the early 1900's. The system consists of approximately 80 miles of transmission lines and 9 substations, and serves approximately 15,500 customers, or approximately 90 MW of load. The system covers approximately 6,000 square miles of PSCo service territory, much of which is located in rural areas outside of Greeley.

The 44 kV system was acquired by PSCo from Home Light and Power in the 1980's. Due to its age, much of the infrastructure on the system has become outdated and is not constructed to current PSCo standards. Furthermore, 44 kV is a non-standard transmission level voltage and is no longer incorporated in bulk transmission systems.

Over the past century, the City of Greeley and the surrounding area have grown in around the existing 44 kV transmission equipment, making operation and maintenance difficult due to clearance and spacing limitations. Making matters worse, the majority of the 44 kV infrastructure has deteriorated to the point where substantial maintenance work is required to keep the equipment in-service, which has led to significant cost expenditures. Additionally, the system is nearing its load serving capacity with limited potential to provide service for future retail customers.

For reliability purposes, the 44 kV system is almost always operated as three radial transmission branches, each served from a separate 115 kV transmission source within the City of Greeley. These three source substations are Weld Substation, Greeley Substation and Monfort Substation. Because of this configuration, there are risks of losing customer electric service loads amounting to approximately one-third (1/3) of the 44 kV system during certain equipment failure conditions. Figure 3 below shows a diagram of the typical configuration of the three radial branches of the 44 kV system.

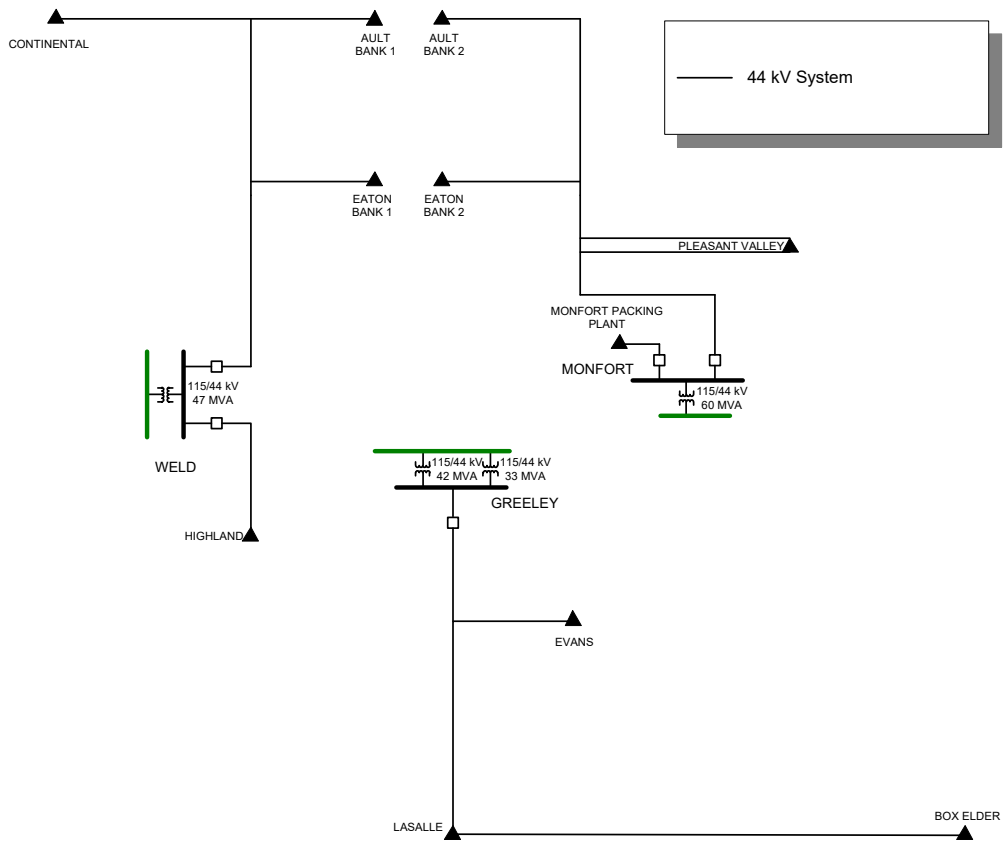

Figure 3: Radial Configuration of the 44 kV System

During certain conditions, these three radial branches can be connected by closing the normal open switches at the Ault, Eaton, Monfort, and/or Highland Substations to help with operational flexibility in serving loads. However, operating under this configuration lowers the reliability of the 44 kV system by increasing the risk of de-energizing one-half (1/2) the system rather than one-third (1/3) each time there is an equipment failure or line fault. This elevated risk is due to the lack of circuit breakers at certain 44 kV substations. Furthermore, connecting the 44 kV system in this manner does not significantly increase the load serving capability of the system, and depending on its configuration, may in fact lower it due to low voltage conditions arising on the system. Figure 4 below shows a diagram of the location of the normal open switch locations on the 44 kV system.

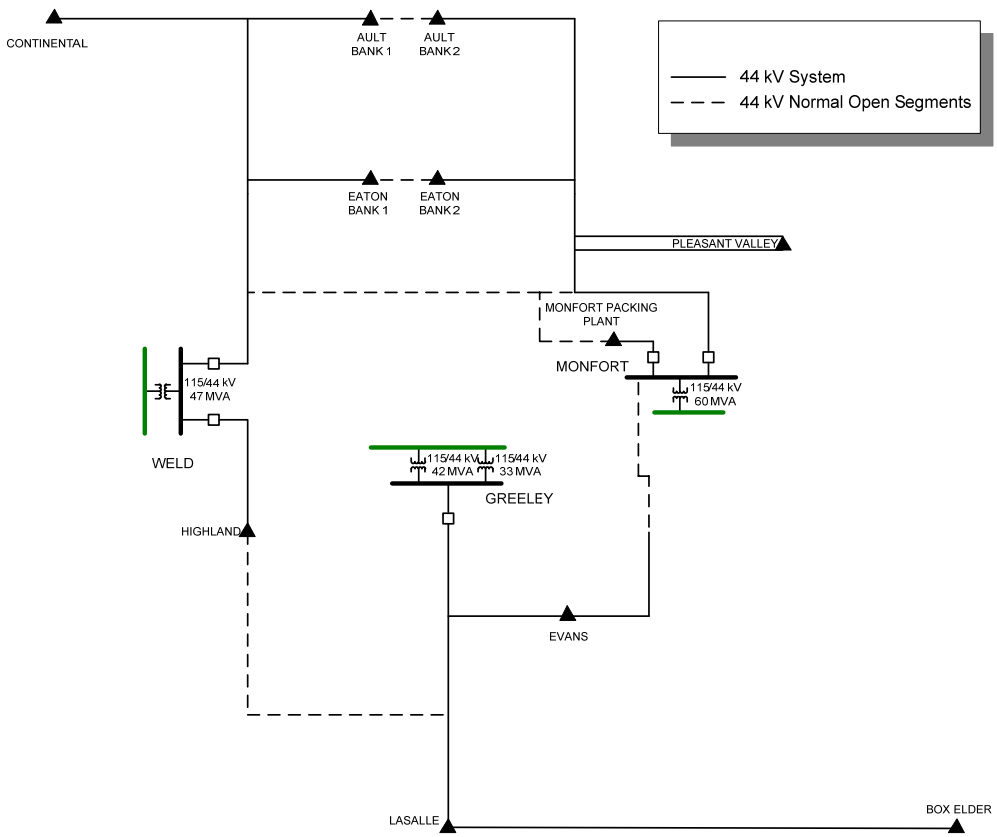

Figure 4: Normal Open Locations of the 44 kV System

Due to the radial configuration necessary for reliability purposes, the load serving capability of the 44 kV system is limited to the summation of the ratings of the Weld source (the 115/44 kV transformer at Weld – about 47 MVA) and the Greeley source (the single 44 kV transmission line exiting the Greeley Substation – about 48 MVA), for a total of approximately **95 MVA** (47+48). This rating is based on the single contingency (N-1) outage of the higher rated Monfort source (115/44 kV transformer at Monfort – approximately 60 MVA). Even in the less reliable configuration of the connected, or closed-loop 44 kV system, the load serving capability is limited to approximately **107 MVA** (47+60) by the 115/44 kV transformers at Weld and Monfort with the loss of the Greeley – Greeley Tap 44 kV line. For the past few years the coincident summer peak for the 44 kV system has been approximately 90 MVA and continues to grow.

Recent challenges with the system include the need to order specialized 44 kV equipment, having to coordinate outages with the distribution system due to feeders being located underneath the transmission lines on the existing transmission structures, utilizing traffic control to conduct maintenance work, and restoring property damage incurred during maintenance construction.

Retail Load Growth

Over the past few years, companies have been drawn to Northeast Colorado in search of oil and natural gas from the Niobrara Shale Formation. Load-serving entities such as PSCo and Tri-State Generation & Transmission (Tri-State) have recognized the potential for increased demand for electricity due to oil and gas development in this area. These oil and gas processing and gas compression loads tend to be relatively large in nature, ranging from 6 MW – 60 MW per facility, and are located in remote areas which lacks adequate transmission infrastructure. In addition to these large, retail customer load interconnection

requests, PSCo has observed an approximate 2% annual retail customer load growth in the Greeley area over the past 5 years.

From the City of Greeley 2016 Annual Growth and Development Projections Report[4], the City of Greeley has experienced an average annual population growth rate of about 1.9% over the past 25 years. In 2015 the City experienced a 2.51% annual growth rate in residential permits and a 1.97% population growth rate. From this report, Figure 5 shows a graphical representation of the last 25 years of new residential building permits filed, while Figure 6 shows the City's housing forecast for 2016 - 2021.

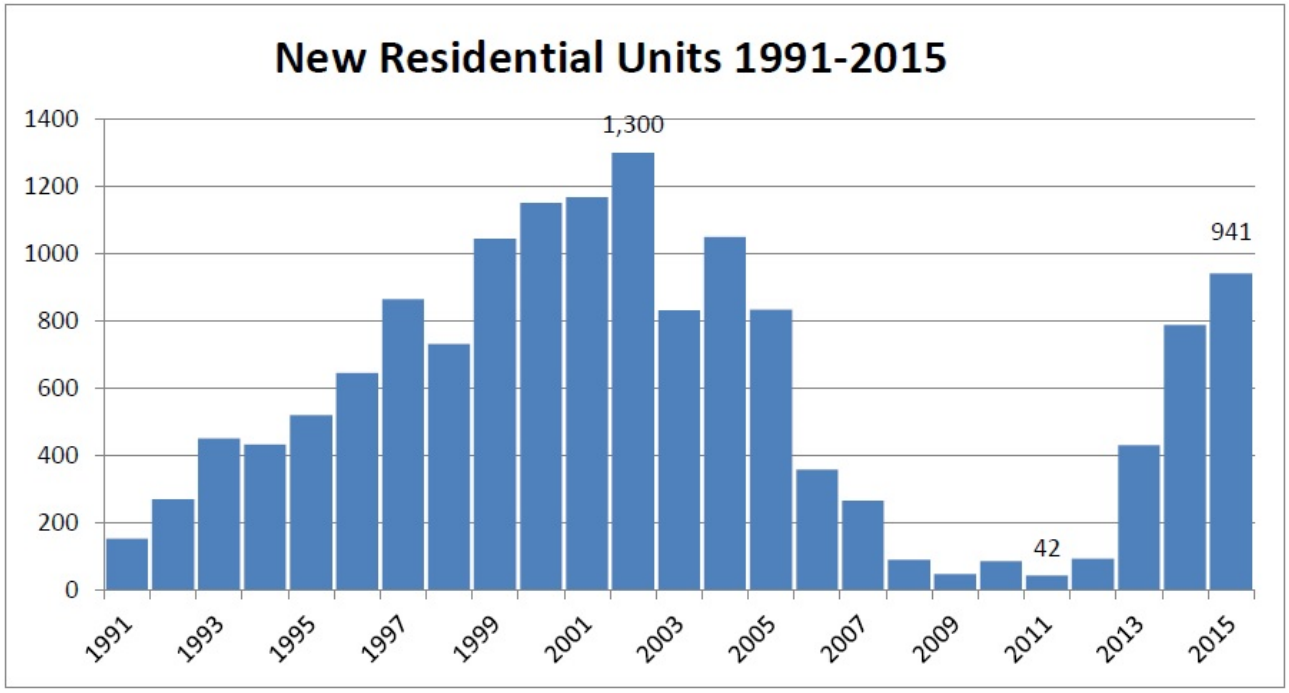

Figure 5: City of Greeley New Residential Units 1991 - 2015

[4] http://greeleygov.com/docs/default-source/community-development/long-range-planning/growth-and-development-projections/2016-annual-growth-and-development-report.pdf?sfvrsn=2

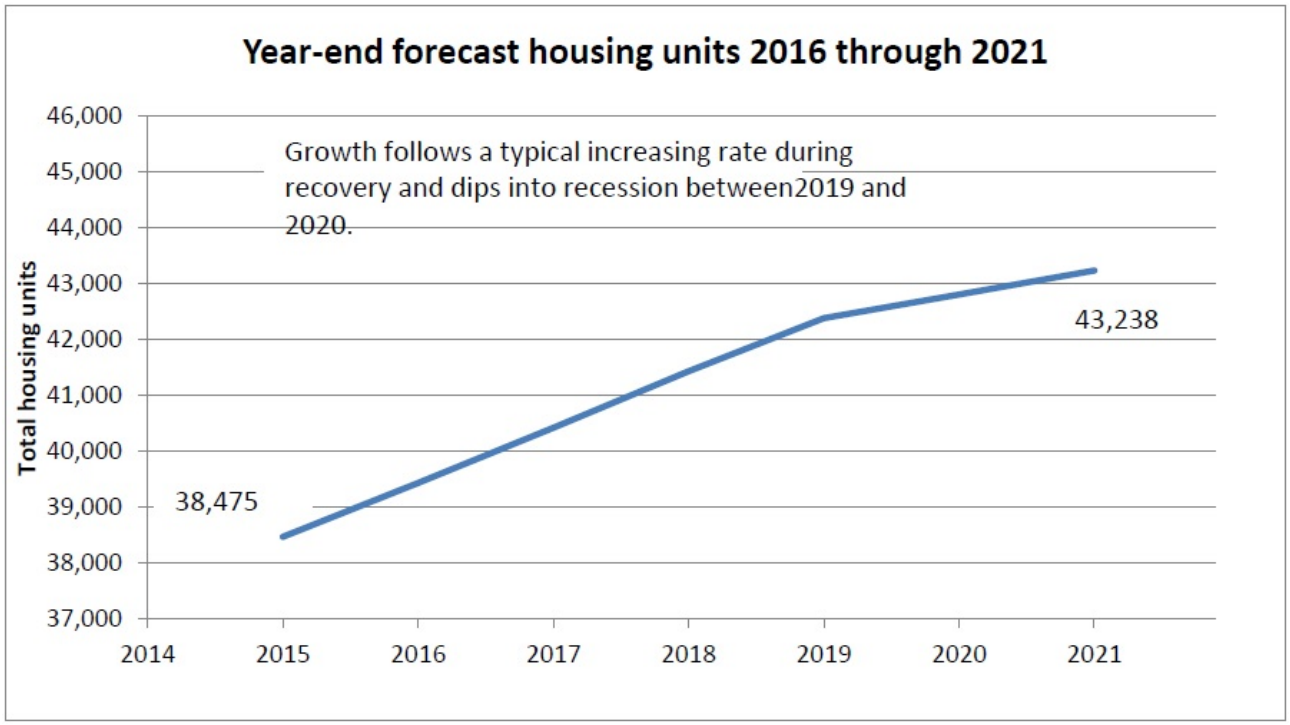

Figure 6: City of Greeley 5 Year Housing Forecast

In an effort to serve the new retail load interconnection requests, as well as the anticipated retail load growth in the Greeley area, the NECO Subcommittee performed a reliability study to develop a transmission plan.

Transmission & Generation Serving the Greeley Area 44 kV System

NECO participants are always committed to ensuring reliability for their customers in the region. This is especially true for PSCo with the City of Greeley and the surrounding area. As previously mentioned the loads in and around the City of Greeley are primarily served by the aging 44 kV transmission network which has a maximum load serving capability of **95 MVA**. That 44 kV network is sourced by three 115 kV substations; Weld, Greeley and Monfort. In addition to the 44 kV system, a portion of the loads within the City of Greeley are served by an existing 115 kV system.

The 115 kV load serving system in the study area can be divided into two groups, the 115 kV system in the City of Greeley and the 115 kV system in the surrounding Greeley area. The 115 kV system in the City of Greeley consists of seven 115 kV load serving substations; Greeley, UNC, Rosedale, Leprino, Monfort, Lucerne and Arrowhead Lake, while the 115 kV load serving system in the Greeley area consists of the Johnstown, Gilcrest, Boomerang, South Kersey, Kodak, Bracewell, Windsor and substations in addition to the seven substations comprising the 115 kV load serving system in the City of Greeley. Like the 44 kV system, over the past few years, the coincident summer peak for the City of Greeley and the Greeley area 115 kV systems have been approximately **170 MW** and **260 MW,** respectively, and also continue to grow. These totals do not include the loads served by the 44 kV system. When considering the two together, the total loading of the 115 kV system in the Greeley area is approximately **350 MVA**. A single 115 kV transmission line (Western's Kersey West – Rosedale 115 kV line) rated at 120 MVA acts as a source to the Greeley area, importing power from the east.

Similar to how the 115 kV system sources the 44 kV system in Greeley, an even higher voltage 230 kV system sources the 115 kV system. The single 230 kV source for the 115 kV system in the Greeley area is located at the jointly owned Weld Substation where there are three 230/115 kV transformers, two of which are owned by Western and the other is owned by PSCo. Furthermore also located on PSCo's 230 kV bus at the Weld Substation, are two distribution transformers rated at 50 MVA, that help to serve loads within the City of Greeley. Approximately **30 MW** of load during the summer peak is served from these distribution transformers.

A table listing the various loads and their voltages can be found in Table 2.

Two local generation resources are located within the City of Greeley 115 kV system; one, rated at approximately 30 MW, is near the Monfort Substation, and the other, rated at approximately 70 MW is located near the UNC Substation. Within the past six years, both of these local generation facilities have been retired and were disconnected from the 115 kV transmission system.

From its configuration, the load serving capability of the 115 kV transmission system in the Greeley area is limited to the summation of its 230 kV source (the 230/115 kV transformation capacity at the Weld Substation) and the single 115 kV transmission source at the Rosedale Substation (Western's Kersey West – Rosedale 115 kV line). As described above, this is because the loads on both the 115 kV and 44 kV systems in the Greeley area are sourced by those three 230/115kV transformers at the Weld Substation and the Kersey West – Rosedale 115 kV line.

For the contingency of the two 230/115 kV 150 MVA transformers at the Weld Substation, a result of a 115 kV bus fault on the Western owned half of the substation, the load serving capability of the 115 kV system (which includes the 44 kV system loads) is limited to **400 MVA**. This limit is the result of the remaining 230/115 kV 280 MVA transformer at Weld Substation and the Kersey West – Rosedale 115 kV 120 MVA line. Studies show that as load is increased within and east of Greeley, additional power flows through the Weld transformers and the 115 kV system in Greeley, resulting in the potential for unacceptable loading of the transformers and 115 kV transmission lines. Figure 7 provides a depiction of the higher voltage transmission sources to the Greeley area.

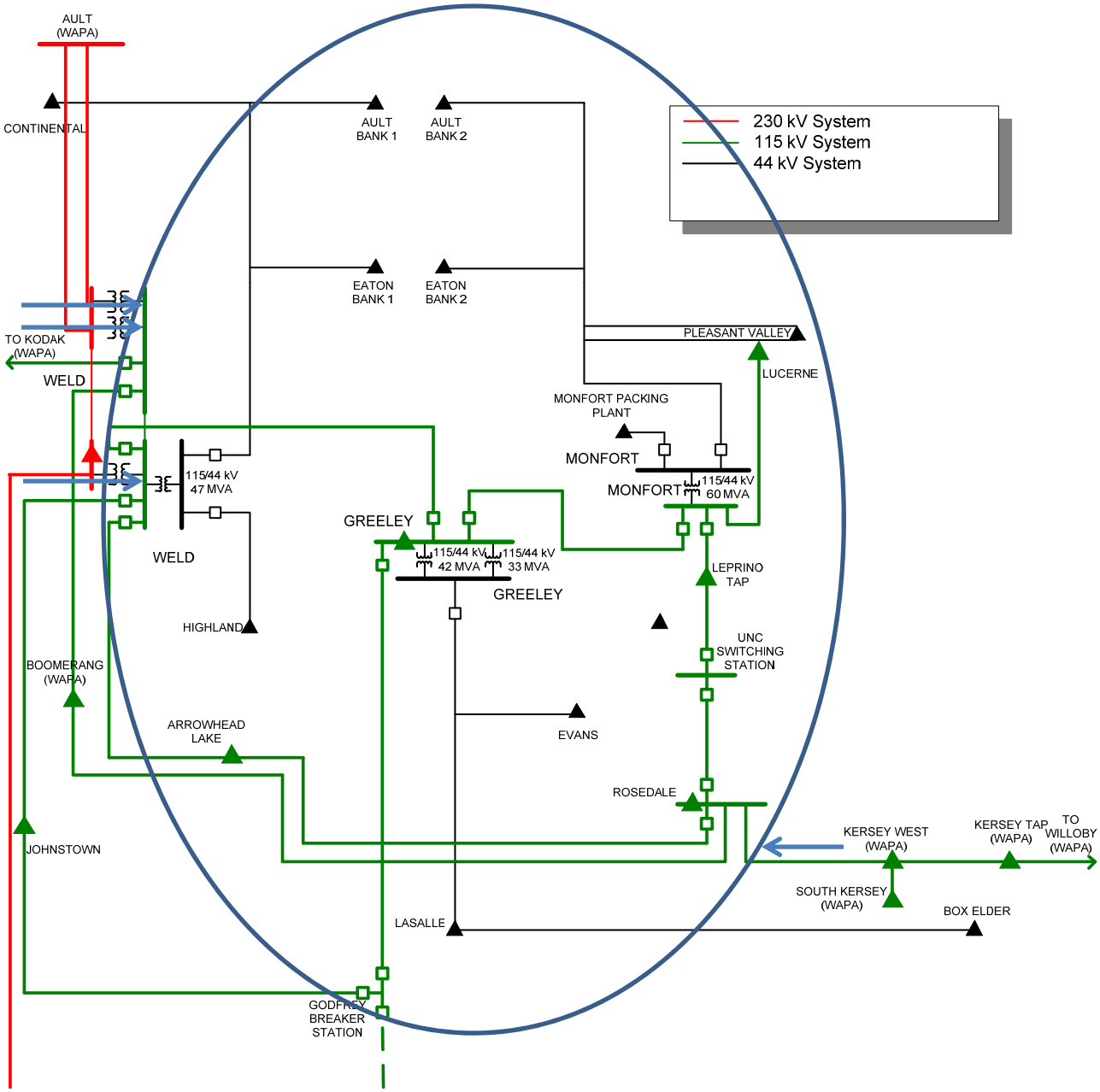

Figure 7: Greeley Area Transmission Sources

1.1. Future Resources Accommodation

The Greeley area transmission system is located electrically adjacent to the TOT 7 transfer path. The Western Electricity Coordinating Council (WECC) defines a transfer path as "a facility(ies) between systems or internal to a system, for which schedules and/or actual flows can be monitored for reliability purposes.[5]" The TOT 7 path is recognized by the WECC as Path 40 and has an existing rating of 890 MW north to south. The transfer capability is divided between PSCo and Platte River Power Authority (PRPA). The TOT 7 transfer path is an essential transmission path for the delivery of power into the Denver-metropolitan load center from the north, and it consists of three 230 kV transmission lines:

- Ault – Windsor – Fort St. Vrain

[5] WECC: Project Coordination, Path Rating and Progress Report Process, June 6, 2017, p.13

- Weld – Fort St. Vrain
- Longs Peak – Fort St. Vrain

Figure 8: TOT 7 Transfer Path below shows the TOT 7 transfer path.

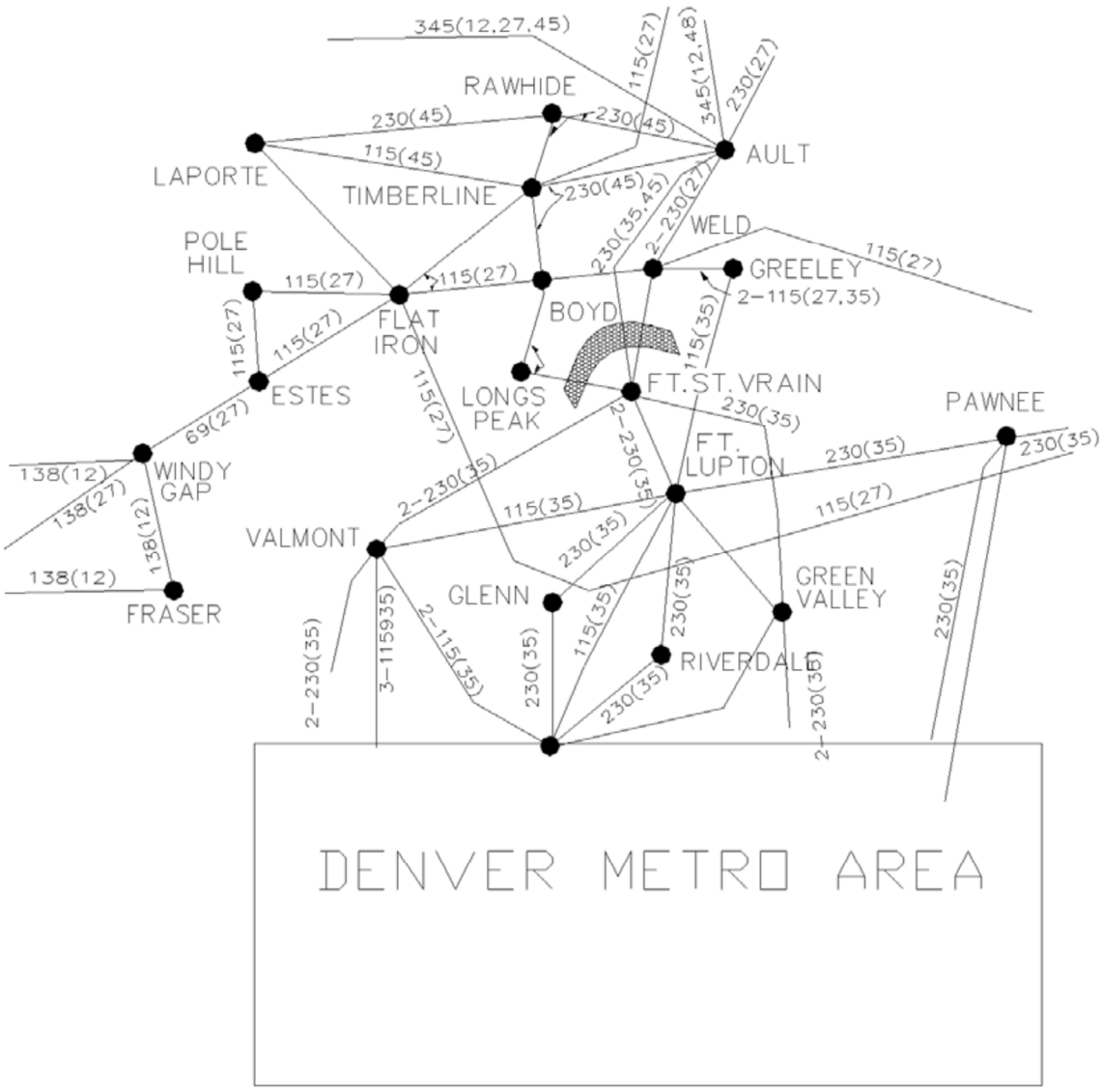

Figure 8: TOT 7 Transfer Path

Generally, the direction of power flow through the region is in the north to south direction. This is due to resources in Wyoming, such as Laramie River Station (LRS), and northern Colorado, such as Fort St. Vrain (FSV), delivering their energy to Denver-metropolitan area loads.

In 2007, the Colorado Legislature passed Senate Bill 07-100, which requires rate-regulated utilities to develop plans for transmission facilities to accommodate the development of beneficial energy resources

located in or near Energy Resource Zones (ERZ's). The TOT 7 transfer path and much of the Greeley area and Foothills electrical system lie in ERZ #1, which encompasses most of northeastern Colorado. Senate Bill 07-091, also signed into law in 2007, resulted in the identification of renewable resource generation development areas (GDA's) within Colorado that have potential to support the development of renewable resources. GDA #1 is directly north of the Greeley area and has the potential for wind generation development.

The Greeley area is located within ERZ #1, and within ERZ #1 there are three identified wind GDA's, each located north of the Greeley area. There is currently 1,275 MW of developed wind resources (1,215 MW owned by PSCo) located in ERZ #1, and future renewable generation development potential exists within the GDA's and ERZ #1.

Additional Transfer Capability

As part of the Northern Greeley Area Transmission Plan, the addition of a new transmission pathway originating north of the City of Greeley and connecting to the bulk transmission system south of the City of Greeley has the potential to impact the TOT 7 path rating. This study considered the potential impacts to the TOT 7 path by monitoring the path power flows for each scenario as well as determining the TOT 7 system operating limits for the base and recommended alternative study models. The studies indicate a new transmission path originating at the Western owned Ault Substation that terminates at the PSCo owned Cloverly Substation has the potential to divert power flow away from the existing TOT 7 pathway through the creation of a new parallel pathway. In this study, approximately 104 MW of power flow was observed to flow along this new pathway, and the system operating limit was increased from approximately 390 MW to approximately 562 MW. The development of this alternative branch may require a redefinition of the TOT 7 path to adequately identify power flow limitations, should any exist in the future.

IV. Methodology

Studies

This study included steady state power flow, and voltage stability analyses. Facility loadings and voltages were monitored within the study area consistent with NERC and WECC standards. Since the transmission plan includes an interconnection to a non-PSCo facility at Ault, additional studies were performed to evaluate the Western owned Ault interconnection and how the project might impact the power flows in and out of the Ault substation.

A benchmark analysis was performed in order to compare alternatives and sensitivities to benchmark conditions. All models were reviewed by the NECO Subcommittee. Once the benchmark case was developed, a steady state power flow and voltage comparison analysis was conducted for various transmission system alternatives developed by the NECO Subcommittee within the identified study area. From this analysis the recommended transmission improvements necessary to satisfy the objectives of increasing the reliability, load serving capability and future resource accommodation of the transmission system that also aligns with other ongoing transmission projects and studies in northeast Colorado were identified.

A sensitivity analysis also consisting of steady state power flow and voltage stability analysis was then performed for scenarios developed and agreed to by the NECO Subcommittee on the benchmark case and recommended transmission alternative cases. These sensitivities included variations of load, generation, and transmission configurations. Results of the sensitivity analysis were then compared.

In addition to the steady state studies, a voltage stability analysis was performed. This type of study utilized Power – Voltage, or "PV" analysis to determine how much load (power, or "P") could be served before hitting voltage ("V") limitations. These studies were performed using the NECO Subcommittee recommended transmission alternative case to identify the maximum load serving capability of the transmission project.

As a step beyond, voltage stability analysis was also performed on transmission expansions to the recommended alternative. These expansions were suggested by participants of the NECO Subcommittee and included the addition of higher voltages and new 115 kV transmission extending from various portions of the transmission plan to areas of the existing transmission system. Results of this analysis were examined and compared to determine the incremental increases to the load serving capability based on the expansion.

Finally, the system operating limit of the TOT 7 transfer path was determined for the base and recommended alternative models to determine the potential impacts to TOT 7. This was accomplished by increasing generation to the north of the transfer path and decreasing generation to the south of it.

Case Development

The benchmark study model was derived from the CCPG approved 2024hs_r4 case which has been reviewed and approved by members of the CCPG. Participants of the NECO Subcommittee reviewed and provided modifications to the case to accurately reflect the best assumptions of transmission load, generation and topology within the CCPG footprint for the year 2026. Case modifications were provided by Basin Electric, Black Hills, Colorado Springs Utilities, Platter River Power Authority, Tri-State and Western. The derived benchmark case, titled NECO_2026hs_Base Case R4 was approved by the NECO Subcommittee on March 10th, 2016. Studies based on this case included benchmarking and modeling of individual alternatives and sensitivities, using the latest forecasted loads and topology in the study footprint, which were also provided by participants of the NECO Subcommittee.

CCPG Approved Case (PSS/E v33.4.0 Software Format)

- File name: ccpg_2024hs_r4.sav

Derived Benchmark Case (PSS/E v33.4.0 Software Format)

- File name: NECO_2026hs_Base Case R4.sav

System Topology Changes

The following section describes the significant and major transmission topology changes that were included in the benchmark case as provided by PSCo, Basin Electric, Black Hills, Colorado Springs Utilities, Platter River Power Authority, Tri-State and Western based on their review of the case as participating members of the NECO Subcommittee.

Greeley Area 44 kV Transmission System

Included in the benchmark case was the detailed model of the 44 kV transmission system. Typically, the 44 kV transmission system is not modeled in power flow cases due to it being classified as a sub transmission system and operated radially. Instead, the 44 kV system loads are captured by representing them as lumped equivalent loads modeled at each of the three 115/44 kV source substation buses in Greeley (Weld, Greeley and Monfort). These lumped load equivalents represent the radial loads being served from their respective 115 kV source as illustrated above in Figure 3.

Recall from Figure 3 that the Greeley 44 kV system is generally operated as three radial transmission systems served from three 115 kV sources (the Weld, Greeley and Monfort Substations). The addition of the detailed model of this system resulted in the addition of nine (9) 44 kV load serving substations (Ault, Eaton, Continental, Pleasant Valley, Highland, Evans, Monfort, LaSalle and Box Elder) and the subsequent transmission lines between them. A tenth 44 kV substation, Weber, was removed from service and de-commissioned in June of 2015, and its load was electrically transferred to the Greeley 115 kV substation via the distribution system.

The detailed model of the 44 kV system loads assumes a 2% annual growth factor based on the 2014 coincident peak load. A list of these loads and the calculated 2026 loads can be found in Table 2.

In addition to the detailed model of the 44 kV system, the 115 kV portion of Tri-State developed Southwest Weld Expansion Project (SWEP) was included in the benchmark case model.

Southwest Weld Expansion Project

The following is from the 10-Year Transmission Plan provided by Tri-State and is found on their website:

> Tri-State is developing the Southwest Weld Expansion Project ("SWEP"), which will initiate the transmission development in the region for serving oil and gas loads. The SWEP consists of 230 kV and 115 kV transmission that begins near Ft. Lupton, Colorado, travels east towards Hudson, and then heads north and ultimately connects to existing transmission a few miles south of Kersey. Tri-State received a CPCN for the project from the CPUC in 2014. Much of the SWEP transmission is planned to be constructed as double-circuit with 230 kV capability, with one circuit initially energized at 115 kV. The SWEP passes near or through Public Service customer service territory, and the Company (Tir-State) has received requests for load interconnections in the area. The SWEP also provides opportunity to link with longer term transmission plans in northeast Colorado. As a result, Public Service plans to participate in SWEP. Tri-State has agreed to Public Service participation at a 40 percent share, and Public Service intends to seek CPUC approval for their participation in 2016. [6]

The SWEP will consist of a new, double-circuit 230 kV capable transmission line between two new substations, Greenhouse and Milton. The new transmission will initially be operated as single circuit 115 kV and will interconnect with the new proposed Colfer and Rattlesnake Ridge and existing Davis load serving substations. An additional new 115 kV line originating at Greenhouse and connecting to Davis will also be constructed, and the Davis Substation will be removed from PSCo's Ft. Lupton – Hudson 115 kV

[6] https://www.tristategt.org/sites/ts/files/PDF/10-year%20transmission%20plan%20filing%20details%20020116/10-year%20transmission%20plan%202016.pdf

line. From Milton, The transmission line will extend north to the South Kersey Substation to form a transmission loop. Greenhouse will also interconnect with the Tri-State's JM Shafer facility and the Henry Lake Substation. Figure 9 below shows a diagram of the Study Area with SWEP included.

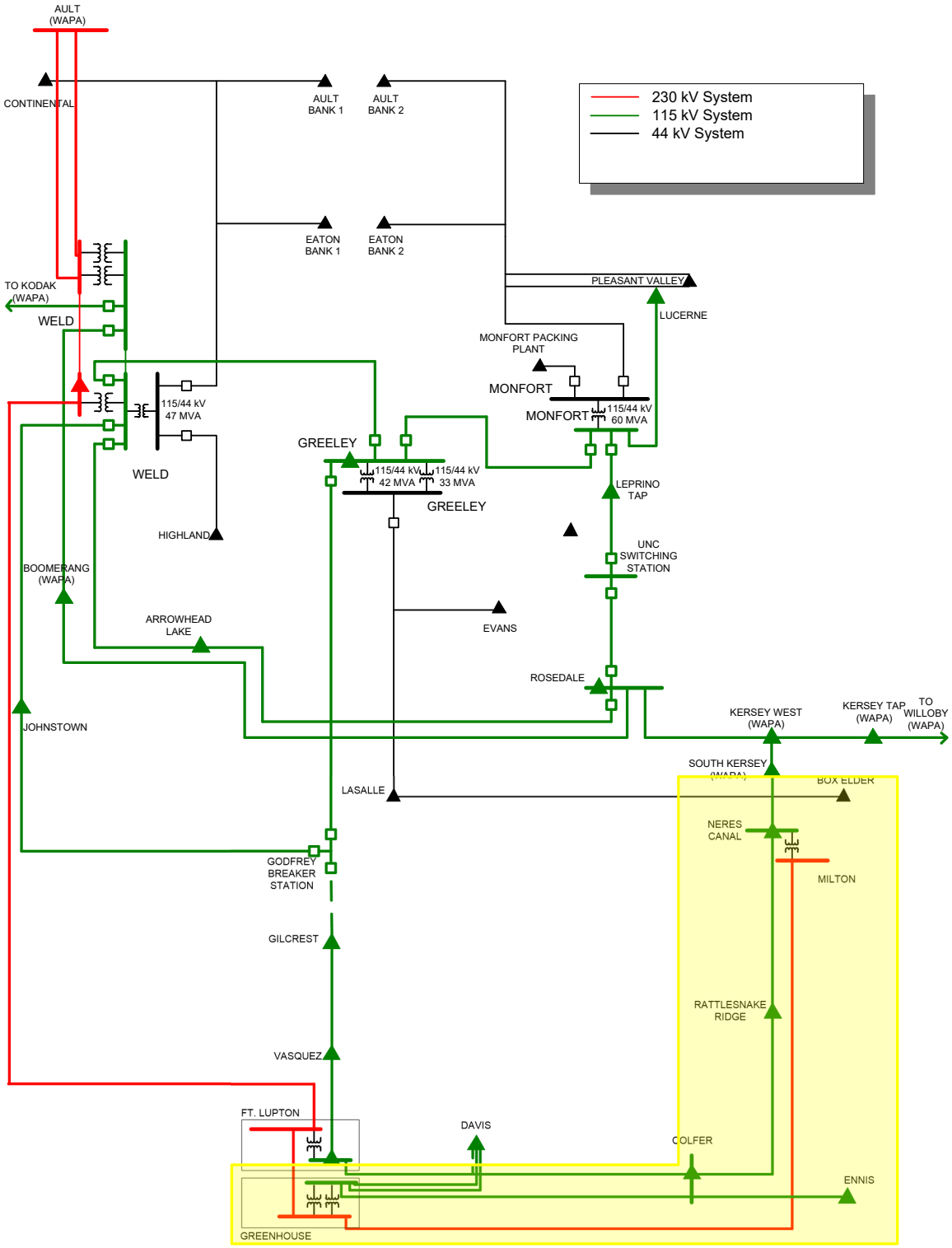

Figure 9: Tri-State Proposed SWEP (Highlighted in Yellow)

The SWEP model, including the 230 kV line, was already part of the CCPG Approved 2024hs case. For the benchmark case, Tri-State requested that only the 115 kV line connecting to the Davis, Colfer, Rattlesnake Ridge and Neres Canal (Milton) Substations be in-service.

Pawnee – Daniels Park 345 kV Transmission Project

While outside the identified Study Area, the Pawnee – Daniels Park 345 kV Transmission Project (In-Service Date 10/1/2019) was also included in the benchmark case to maintain accuracy.

Finally, the following transmission lines and elements were included in the model, but listed as out-of-service for the benchmark scenario:

- SWEP 230 kV transmission line
- New Ault (Husky) 115 kV Substation
- New Eaton (Graham Creek) 115 kV Substation
- Ault – Cloverly 115/230 kV
    - The 115 kV transmission line is modeled out of service for the benchmark model. Upon removal of the northern portion of the Greeley area 44 kV system the line can be switched in-service. Detailed switching instructions were provided to participants of the NECO Study Group and can also be found in Appendix C.
    - The proposed future 230 kV expansion on this double-circuit capable transmission line was modeled out of service
- 30 MVAr capacitor bank at New Ault (Husky) Substation
- Rosedale 230 kV Substation
- Beebe Draw 230 kV Substation
- Weld – Beebe Draw – Rosedale 230 kV transmission line
- Rosedale – Milton 230 kV transmission line
- Husky – Rosedale 230 kV transmission line

The purpose of including and modeling these lines as out-of-service is for future analysis using the benchmark case.

Load Modeling

In developing the benchmark model, loads were modified to reflect the latest 2026 heavy summer load forecasts as provided by PSCO, Basin Electric, Black Hills, Colorado Springs Utilities, Platter River Power Authority, Tri-State and Western based on their review of the case as participating members of the NECO Subcommittee.

Greeley Area 44 kV System Model Loads

In the CCPG approved 2024hs case the Greeley area 44 kV system loads were represented as lumped load equivalents at the Weld, Greeley and Monfort Substations. The total lumped 44 kV system load in the case was approximately 84 MW and 8 MVAr (**84.4 MVA**). With the application of the PSCo 2026 heavy summer load forecast modifications, the total lumped 44 kV system load was approximately 99 MW and

19 MVAr (**100.8 MVA**). These lumped loads were changed to 0 in preparation for the addition of the detailed 44 kV model in order to avoid double counting. Table 1 below provides a list of the loads and buses in the Greeley area that were modified from the CCPG approved 2024hs case in preparation for the detailed 44 kV model.

Substation	Approved CCPG 2024HS Case Bus Number	Bus Voltage	CCPG 2024HS Load		PSCo 2026HS Load Forecast		Description
					MW	MVAR	
Greeley 'P1'	70210	44	7.14	1.52	7.17	1.53	Lumped 44 kV load modeled at Greeley 115 kV Sub
Greeley 'P2'	70210	44	7.14	5.69	7.17	5.71	Lumped 44 kV load modeled at Greeley 115 kV Sub
Weld 'P2'	70469	44	37.86	1.12	38.00	1.14	Lumped 44 kV load modeled at Weld 115 kV Sub
Monfort 'P1'	70290	115	31.47	(0.70)	31.59	(0.70)	Lumped 44 kV load modeled at Monfort 115 kV Sub
Monfort 'P2'	70290	115	-	-	-	-	
Monfort 'IN'	70290	115	-	-	14.78	11.46	Lumped 44 kV load for Monfort Packing Plant
Total			83.62	7.63	98.71	19.14	

Table 1: Removal of the Lumped 44 kV System Loads

The loads for the detailed Greeley area 44 kV system were derived from the 2014 Greeley area coincident peak which occurred on July 22nd, 2014 at 17:00 hours. At the time of this analysis, the 2014 coincident peak data was the most recent loading data available. The 2014 coincident peak for the Greeley area 44 kV system showed approximately 84 MW and 25 MVAr (**87.6 MVA**) being served by the 44 kV transmission system. This total included the Weber Substation which was removed from service and de-commissioned in June of 2015, and its load electrically transferred to the Greeley 115 kV Substation via the distribution system. Because of this, the Weber Substation load is assumed to be represented at the Greeley 115 kV Substation as part of the PSCo 2026 load forecast in the 2026 load model.

A 2% annual growth factor was used to estimate the 2026 heavy summer loads. The total load modeled for the Greeley area 44 kV system in the detailed 2026 heavy summer model was approximately 97 MW and 27 MVAr (**100.7 MVA**). This total does not include the 2018 planned 6.5 MW expansion the Monfort Packing Plant outlined in the Retail Customer Load Requests section. When considering this load, the total load modeled for the Greeley area 44 kV system is approximately 104 MW and 32 MVAr (**108.8 MVA**). Table 2 below shows a list of the detailed Greeley area 44 kV system loads based on the 2014 coincident peak as well as the assumed 2026 heavy summer loads as calculated using a 2% annual growth factor.

Substation	Approved CCPG 2024HS Case Bus Number	Benchmark 2026 Case Bus Number	SCADA 2014 Peak Load		2026 Forecast Assumptions		Benchmark 2026 Case Load Additions		Comments
			MW	MVAR	MW	MVAR	MW	MVAR	
44 kV System									
Continental	N/A	70803	1.95	0.77	2.47	0.98	2.47	0.98	Customer has requested facility to remain on the 44 kV system.
Ault 1	N/A	70810	1.66	0.57	2.11	0.72	2.11	0.72	
Ault 2	N/A	70808	3.70	1.16	4.69	1.47	4.69	1.47	
Eaton 1	N/A	70819	5.06	0.98	6.42	1.24	6.42	1.24	
Eaton 2	N/A	70817	10.37	1.33	13.15	1.69	13.15	1.69	
Pleasant Valley 1	N/A	70838	14.63	2.32	18.55	2.94	18.55	2.94	
Highland	N/A	70875	9.80	0.31	12.43	0.39	12.43	0.39	
Evans	N/A	70877	12.26	3.88	15.55	4.92	15.55	4.92	
Weber	N/A	N/A	4.80	1.81	6.09	2.30	-	-	Retired. Assume load moved to Greeley 115 kV substation as part of 2026 forecast
LaSalle	N/A	70865	4.47	0.52	5.67	0.66	5.67	0.66	
Box Elder	N/A	70870	2.29	1.25	2.90	1.59	2.90	1.59	
Monfort	70290	70845	13.04	10.01	20.00	15.20	20.00	15.20	Customer has requested facility to remain on the 44 kV system. Phase II 6.5 MW expansion ISD 2018 included.
Total			84.03	24.91	110.03	34.10	103.94	31.80	

Table 2: Addition of Detailed Greeley Area 44 kV System Loads

Retail Customer Load Requests

PSCo has received a multitude of large, single customer, transmission load interconnection service requests from potential retail oil and gas customers. These facilities are typically large in demand size (ranging from a few to several hundred megawatts) and require continuous operation.

As agreed by the NECO Subcommittee, the benchmark case does not take into consideration the addition of any PSCo retail load interconnection requests other than those that already have a signed electric service agreement (ESA) with PSCo. Rather, the inclusion and impacts of these loads were evaluated in a high load sensitivity analysis.

Retail loads that were added to the benchmark case include the following:

- A 6.5 MW expansion was added to the existing 13.5 MW Monfort Packing Plant load located on the 44 kV system. This load represents the planned facility expansion request received by PSCo and scheduled to be in-service by 2018.
- A 20 MW load at a new Cloverly Substation, and subsequent 2 mile 115 kV transmission line connecting it to the existing Lucerne load tap location. This load represents the addition of an oil and gas customer that has a signed electric service agreement (ESA) with PSCo and whose facility went into service in the second quarter of 2016. As part of the PSCo 2026 heavy summer load forecast, this 20 MW load was modeled at the Monfort Substation ('PS'). The Monfort representation of this load was removed from the case.
- The Leprino load was increased from 9.78 MW to 15 MW to represent the full output of the facility.

SWEP Loads

Also agreed upon by the NECO Subcommittee, two load levels were provided by Tri-State for this study; low oil (198 MW) and high oil (288 MW). Tri-State requested, and the NECO Subcommittee agreed, that the low oil scenario be used for the benchmark case, while the high oil scenario be used for the high load sensitivity. The main difference between the two scenarios is an increase of load at the Davis, Colfer, Rattle Snake Ridge and Neres Canal (Milton) Substations as well as the addition of the Greenhouse – Milton 230 kV line. The SWEP and loads were already included in the CCPG Approved 2024hs case model.

A breakdown between the SWEP loads in the CCPG Approved case and the benchmark case can be seen in Table 3 below:

	Bus Number	CCPG 2024HS R4 Case		NECO 2026HS R4 Case (Benchmark)	
		MW	MVAr	MW	MVAr
SWEP		**350.8**	**115.2**	**198**	**65.08**
Neres Canal (Milton)	72226	50	16.4	18	5.92
Rattle Snake	72222	115.4	37.9	40	13.15
Colfer	72218	72.7	23.9	30	9.86
Davis	72221	112.7	37	110	36.15

Table 3: SWEP Case Loads

Finally, the following loads were included in the model, but listed as out-of-service for the benchmark scenario:

- New Ault (Husky) 115 kV – This load represents the conversion of the existing Ault and Cloverly 44 kV loads to a new 115 kV system.
- New Eaton (Graham Creek) 115 kV – This load represents the conversion of the existing Eaton 44 kV loads to a new 115 kV system.
- Cloverly 115 kV – This load represents the conversion of the existing Pleasant Valley 44 kV loads to a new 115 kV system.
    - The 115 kV transmission line is modeled out of service for the benchmark model. Upon removal of the northern portion of the Greeley area 44 kV system the line can be switched in-service. Detailed switching instructions were provided to participants of the NECO Subcommittee and can also be found in Appendix C.
- Beebe Draw 230 kV – This load represents the conversion of the existing LaSalle 44 kV load to a new 230 kV system.
- Arrowhead Lake 115 kV 'P2' – This load represents the conversion of the existing Evans and Highland 44 kV loads to the existing Arrowhead Lake Substation.
- New Box Elder 115 kV – This load represents the conversion of the existing Box Elder 44 kV load to a new 115 kV system.

The purpose of including and modeling these loads as out-of-service is for future analysis using the benchmark case.

Generation Modeling

Generation in the benchmark case was only changed in accordance with updates provided by Basin Electric, Black Hills, Colorado Springs Utilities, Platte River Power Authority, Tri-State and Western based on their review of the case as participating members of the NECO Subcommittee. Outside of the provided changes, area swing generation units were allowed to adjust automatically based on the load. Best efforts were given to ensure unit generation was modeled as physically possible and economically reasonable.

At the time of this study, announcement of the retirement of Craig Unit 1 had not been made; therefore Craig Unit 1 is included in the benchmark case model. However, sensitivity studies were conducted to determine the impact of the retirement of this unit and are discussed in the Sensitivity Analysis section.

For the benchmark case model the power flows across TOT 3 and TOT 7 were 669.5 MW and -34.0 MW respectively. Typically TOT 3 and TOT 7 power flows are approximately 1200 MW and 500 MW respectively. At these typical levels, the power flows represent a general north to south direction through the region. This is due to resources in Wyoming, such as Laramie River Station (LRS), and northern Colorado, such as Fort St. Vrain (FSV), delivering their energy to Denver-metropolitan area loads. A sensitivity analysis was conducted to determine the impacts to the regional transmission system at these higher TOT levels and is also discussed in the Sensitivity Analysis section.

A detailed list of the generation in Areas 70 and 73 in the benchmark case model can be found in Appendix D.

Line Ratings

Line ratings were added to each branch of the detailed Greeley area 44 kV model. A list of these ratings can be found in Appendix E. All other line ratings in the study utilize the line ratings provided in the CCPG Approved 2024hs case model or ass otherwise specified and provided by participating members of the NECO Subcommittee.

Criteria

As a general rule, the following system parameters were monitored during the study and are tabulated in this report as needed:

1. All buses, lines, and transformers with base voltages equal to or greater than 44 kV in the Colorado power flow Areas 70 and 73 were monitored in all study cases.
2. Post contingency element loadings were only tabulated when an element rating was exceeded and the loading increase was at least 1% from the normal system loading. Specifically, if an element was overloaded in the normal condition and increased no more than 1% in the outage condition, the overload was not reported.
3. Post contingency voltage violations were tabulated only if the deviation was more than 0.08 p.u. from the normal system voltage or higher if allowed by local criteria. Base case and contingency low voltage violations were determined, however contingency voltage violations were ignored if voltage changes were less than 0.08 p.u.
4. Transient and voltage stability criteria will be provided by the Study Group.

The NECO Subcommittee adhered to the following criteria for these load flow studies:

- **Category P0 – System Normal**
  "N-0" System Performance Under Normal (No Contingency) Conditions
  NERC Standard TPL-001-4

Voltage:	0.95 to 1.05 per unit
Line Loading:	100 percent of continuous rating
Transformer Loading:	100% of highest 65 °C rating

Manual or automatic system adjustments such as shunt capacitor or reactor switching, generator scheduling, or LTC tap adjustment are allowed. Area interchanges and phase shifter adjustments are allowed.

- **Category P1 – Loss of generator, line, or transformer (Forced Outage)**
  "N-1" System Performance Following Loss of a Single Element
  NERC Standard TPL-001-4

Voltage:	0.90 to 1.10 per unit
Line Loading:	100 percent of continuous rating.
Transformer Loading:	115% of highest 65 °C rating (for load-serving xfmr's)

Manual system adjustments such as generation dispatch will not be allowed. Area interchange adjustments will not be allowed. Adjustments of shunt capacitors or reactors, phase shifting transformers and load tap changing (LTC) transformers will not be allowed.

- **Category P2 – P7 – Multiple contingency outages**
  Multiple contingency outages – Refer to the NERC contingency table in Reliability Standard
  NERC Standard TPL-001-4

Voltage:	0.90 to 1.10 per unit
Line Loading:	100 percent of continuous rating.
Transformer Loading:	115% of highest 65 °C rating (for load-serving xfmr's)

Manual system adjustments such as generation dispatch will not be allowed. Area interchange adjustments will not be allowed. Adjustments of shunt capacitors or reactors, phase shifting transformers and load tap changing (LTC) transformers will not be allowed.

V. Studies

Alternatives

In order to achieve the key objective of eliminating the existing, antiquated and non-standard, 44 kV system, and replacing it with higher voltage transmission facilities, the NECO Subcommittee was limited in potential transmission alternatives. Nevertheless, the Subcommittee developed and discussed multiple transmission alternatives to try and satisfy the study objectives of eliminating the 44 kV transmission system, ensuring system reliability, and providing flexibility to accommodate future load growth and beneficial resource development while aligning with other ongoing transmission projects and studies in the northeastern Colorado area.

Alternatives Considered but Eliminated prior to the Technical Study Process

Below is a list of the transmission alternatives that were considered by the NECO Subcommittee, but were not evaluated through the technical study process and discussion as to why they were eliminated as potential alternatives:

1. Closing the Normal Open Elements on the Existing 44 kV System:
   This alternative explored the option of looping the existing 44 kV transmission system together by closing necessary normal open elements on the system. The alternative was eliminated because when the normally open switches are closed on the 44 kV system to form a looped configuration, two electrically continuous loops are formed, one in the north and the other in the south. With this alternative, due to the absence of circuit breakers at all of the 44 kV substations except for the three sources; Weld, Greeley and Monfort, the risk of de-energizing the 44 kV system increases from one-third (1/3) to one-half (1/2) each time there is an equipment failure or line fault in either system loop, thereby reducing the reliability of the system. Furthermore, the creation of the looped system does not increase the load serving capability of the 44 kV transmission system, as it would still limited to approximately **107 MVA** by the 115/44 kV transformers at Weld and Monfort with the loss of the Greeley – Greeley Tap 44 kV line. Finally, looping the transmission system does not address the reliability of the aging and outdated infrastructure, nor does it allow for the accommodation of future resources. As such, this alternative was eliminated due to its inability to satisfy the objectives of the study.

2. Rebuilding the Existing 44 kV System to 115 kV:
   This alternative explored upgrading the existing 44 kV transmission system to a 115 kV system. While this alternative would improve the load serving capability, it would not address the reliability issues of the radial 44 kV system unless each new 115 kV substation was constructed with circuit breakers and tied together as a looped system. Additionally, it was determined that there was insufficient right-of-way available in the existing 44 kV corridor for new 115 kV construction so the lines would need to be relocated. Finally, upgrading the 44 kV system would require more transmission than constructing new transmission that connected in the north and terminated at Cloverly. Therefore, this alternative was eliminated based on the need for more transmission which would lead to higher costs.

3. Upgrading the 230/115 kV transformers at the Weld Substation:
   This alternative explored upgrading the three 230/115 kV transformers at the Weld Substation. While this alternative potentially increases the reliability and load serving capability of the 115 kV system in the Greeley area, it does not address the reliability issues or load serving capability of the existing 44 kV system north of Greeley.

4. Upgrading the 115/44 kV transformers Sourcing the 44 kV Transmission System:
   This alternative explored upgrading the three 115/44 kV transformers at the 44 kV transmission source substations; Weld, Greeley and Monfort. This alternative would potentially increase the transformation capacity of the source substations; however, it fails to address the reliability issues of the existing 44 kV system north of Greeley. Furthermore, the 44 kV systems load serving capability would still be limited by the low capacity of the 44 kV transmission lines.

5. Interconnecting a New Transmission Line North or South of the Ault Substation:
   This alternative explored terminating a new transmission line to the north or south of the Western owned Ault Substation that would ultimately connect to the existing Greeley area 115 kV transmission system. While this would be similar to the proposed alternative, which would terminate a new transmission line at the Ault Substation, this alternative would require a new line

tap or substation to be constructed. Because of this, the alternative was eliminated based on the likelihood for higher costs than terminating a new transmission line at the existing WAPA Ault Substation.

6. Interconnecting a New Transmission Line on the LRS – Story 345 kV Line:
   Also similar to interconnecting a new transmission line to the north or south of the Ault Substation, this alternative explored terminating a new transmission line on the LRS – Story 345 kV transmission line that would ultimately connect to the existing Greeley area 115 kV transmission system. While this alternative would improve the load serving capability and potentially allow for the interconnection of resources, it does not address the reliability issues of the existing 44 kV system north of Greeley. This is because the new transmission line would be located much further east in order to connect to the LRS – Story line, and routing it through northern Greeley where the existing 44 kV transmission system is located would not be practical. Also, this alternative would again require a new line tap or substation to be constructed along the LRS – Story line, which would increase project costs. This alternative was eliminated based on its inability to meet the reliability objectives and due to the likelihood for higher project costs associated with a new termination at a location other than the Ault Substation.

7. Utilizing the Cedar Creek – Rocky Mountain Energy Center (RMEC) 230 kV line:
   This alternative explored using the Cedar Creek – RMEC 230 kV line. This line is a privately owned, radial, generation tie line that connects the Cedar Creek Wind Farm to the RMEC Substation and is rated for the output capacity of the wind farm. It is located on the eastern side of the Study area, and east of the existing 44 kV transmission system. While the line could potentially serve new load interconnection requests, dues to its location and configuration, the line does not improve the reliability of the transmission system or allow for the removal of the existing 44 kV transmission system. Furthermore, there is no additional capacity available on the line to accommodate potential new generation resources. This alternative was eliminated based on its inability to meet all the study objectives.

Alternatives Evaluated through the Technical Study Process

Alternatives were developed and agreed to by the NECO Subcommittee based on their potential ability to satisfy the study objectives of improving the reliability, load serving capability, resource accommodation and aligning with other ongoing transmission projects and studies in the northeast Colorado area. Table 4 below lists the developed transmission alternatives that were included in the Study Scope:

Case Label	Alternative No.	Description
0-01		Benchmark
1-01	1	Ault - New Ault (Husky) 230 kV line and New Ault (Husky) - New Eaton (Graham Creek) - Cloverly 115 kV line
2-01	2	Alternative 1 plus New Eaton (Graham Creek) – Weld 115 kV line
3-01	3	Alternative 1 plus New Eaton (Graham Creek) – Greeley 115 kV line
4-01	4	Greeley South Substation located near the existing Arrowhead Lake substation
5-01	5	Non transmission alternatives (local area generation)

Table 4: Study Alternatives List

Alternative 1: Construct a new Ault – New Ault (Husky) 230 kV transmission line, approximately 6.5 miles in length and a new New Ault (Husky) – New Eaton (Graham Creek) – Cloverly 115 kV line, approximately 19 miles in length. Both segments will be constructed as double-circuit capable, however the Ault – New Ault (Husky) 230 kV line will initially be operated as single-circuit 230 kV and the New Ault (Husky) – New Eaton (Graham Creek) – Cloverly 115 kV line will initially be operated as single-circuit 115 kV. This alternative requires a new 230 kV termination at Western's Ault Substation, the construction of two new distribution substations (New Ault (Husky) and New Eaton (Graham Creek)) and the expansion of the existing Cloverly Substation

Alternative 2: Starting with Alternative 1, construct a new, single-circuit, New Eaton (Graham Creek) – Weld 115 kV line, approximately 12 miles in length.

Alternative 3: Starting with Alternative 1, construct a new, single-circuit, New Eaton (Graham Creek) – Greeley 115 kV line, approximately 10 miles in length.

Alternative 4: Construct a new Greeley South Substation located near the existing PSCo Arrowhead Lake Substation. At this new substation location, construct new terminations for the existing PSCo Arrowhead Lake – Rosedale and Godfrey – Greeley 115 kV lines and the Western Boomerang – Rosedale 115 kV line.

Alternative 5: Interconnect and energize local area natural gas fired generation. Two facilities were identified that could be studied for this alternative; the University of Northern Colorado (UNC) facility (69 MW) and the Thermo Monfort facility (32 MW). The power purchase agreements for both facilities have expired and neither facility is currently generating power for the transmission system. Based on the size and age of the facility, the NECO Subcommittee decided to study only the use of the UNC generation facility.

Benchmark and Selected Alternatives Analysis

Steady state power flow and voltage comparison analysis were conducted for the developed benchmark case and for select transmission system alternatives developed and agreed to by the NECO Subcommittee within the identified study area.

Steady State Power Flow and Voltage Analysis

The benchmark and alternative studies focused on the North American Electric Reliability Corporation (NERC) Category P0 (system intact, N-0) and NERC Category P1 (single contingency, N-1) performance. Eight selected NERC Category P2 through P7 disturbances were also performed. The selected NERC Category P2 through P7 are listed below:

- Weld - Boomerang - Rosedale 115 kV common tower outage (breaker to breaker)
- Ault - Weld 230 kV common tower outage
- Weld LM 115 kV bus fault (breaker to breaker for Weld - Boomerang - Rosedale 115 kV)
- Monfort 115 kV main bus fault
- PSCo 230/115 kV transformer failure followed by breaker 5221 failure at Weld
- Breaker 2186 failure at Ault
- Loss of the Windsor 230 kV substation (breaker to breaker)
- Breaker failure at Greeley 115 kV (loss of Weld – Greeley and Godfrey – Greeley 115 kV lines)

A detailed list of the contingency files can be found in Appendix F.

Studies monitored loading and voltages on elements within Areas 70 and 73, consistent with NERC, WECC, and PSCo standards and criteria as outlined in the study methodology. Special attention was paid to the power flows in and out of Western's Ault Substation. For all contingency analyses the following solution parameters were selected:

- Tap Adjustment - Lock Taps
- Area Interchange Control - Off
- Switched Shunt Adjustments - Lock All
- Non-divergent solution selected
- Adjust DC taps
- Solution Engine - Full Newton-Raphson

The subsystem and monitor files can also be found in Appendix F

Results of the alternative scenarios were compared side-by-side with the benchmark case and pre-existing thermal and voltage violations falling within the study methodology criteria were excluded from the tabulated results to avoid them from being attributed to the alternatives examined.

At the July 29th, 2016 NECO Subcommittee meeting, NECO participants decided Alternative 4-01 was outside the scope of study, thus Alternative 4-01 is not tabulated in the tables below.

Based on the benchmark and alternative analysis, the recommended transmission improvements necessary to satisfy the objectives of increasing the reliability, load serving capability and future resource accommodation of the transmission system that also aligns with other ongoing transmission projects and studies in the Greeley area were identified.

All studies were performed through the NECO Subcommittee of the CCPG with PSCo acting as the study facilitator. Steady state power flow and voltage analysis was performed using Siemen's PSS/E v33.4.0 software.

Tabulated Study Results

Tables for the steady state power flow results can be found in Appendix G. Similarly, the tables for the steady state voltage results can be found in Appendix H.

Steady State Analysis Summary

From the steady state power flow and voltage study results, the Monfort 115/44 kV 60 MVA transformer is loaded to 105.4% of its thermal limit under system intact (N-0) conditions in the benchmark case and 105.2% of its thermal limit under system intact conditions in Alternative 5. Alternatives 1 – 3 mitigate this overload for both system intact and single contingency scenarios, however, the transformer loading is increased to 107.1% of its thermal limit for the single contingency of the Pleasant Valley Tap in Alternative 5.

Additionally, the Weld 230/115 kV 150 MVA transformers #1 and #3 are loaded to 115.5% and 111.5% of their thermal limit respectively for the single contingency of the Weld 230/115 kV 280 MVA transformer #2 in the benchmark case. Again, Alternatives 1 – 3 mitigate this overload, however the Weld 230/115 kV 150 MVA transformer #1 is still loaded to 102.2% of its thermal limit for Alternative 5.

The Monfort – Leprino, Rosedale – UNC, Rosedale – Kersey West, UNC – Leprino, Airport – Boyd, Airport – Windsor, Kersey Tap – Willoby, Weld – Boomerang, Weld – Whitney, and Windsor - Whitney 115 kV lines as well as the Monfort 115/44 kV 60 MVA and Weld 230/115 kV 280 MVA transformer #2 were all loaded beyond their thermal limits in the benchmark case for select multiple contingency outages. While Alternative 5 was able to mitigate some of these overloads, Alternatives 1 and 2 were able to mitigate all except for the Airport – Boyd 115 kV line overload. Additionally, Alternative 3 was able to mitigate all overloads except for the Airport – Boyd 115 kV line, and the New Ault (Husky) – New Eaton (Graham Creek) 115 kV line.

From the steady state voltage analysis, only Alternatives 1 – 3 mitigate the voltage violations observed in the benchmark case for both single and multiple contingencies.

Recall that due to its configuration, the 44 kV system is currently limited to serving approximately 95 MVA of load. Assuming a 2% annual retail load growth and the planned 6.5 MW expansion of the Monfort Packing Plant (2018), the 44 kV system load will be approximately 109 MVA by 2026; beyond the system's capability. At this point, the 44 kV system will have reached its ability to support an annual 2% retail load growth, and the interconnection of single, large load, retail Customers will not be feasible. It is anticipated that the system will no longer be able to support retail load growth by 2018 without significant transmission upgrades.

Based on the results of the steady state power flow and voltage study analysis, Alternatives 1, 2 and 3 satisfy the objectives of ensuring system reliability, providing the flexibility to accommodate future load growth and generation resources while aligning with other ongoing transmission projects and studies in the northern Colorado area and also eliminate portions of the 44 kV system. Section VII (Voltage Stability Analysis) indicates that there could be at least a 120 MW improvement in load-serving capability. Both Alternatives 2 and 3 are expansions of Alternative 1, and are therefore not economically feasible to be

the lowest cost option, and as such were not selected as the preferred solution. Nevertheless, these can be added to Alternative 1 in the future, should the need arise.

Alternative 4 was determined to be outside the scope of study by the study group participants at the July 29th, 2016 NECO Subcommittee meeting. Even though Alternative 4 does potentially provide future reliability improvements to the Greeley 115 kV system, it fails to satisfy the reliability and load serving capabilities of the 44 kV system, and does not allow for load growth north of Greeley. Therefore Alternative 4 was eliminated as the preferred solution.

While the local generation added in Alternative 5 helps to increase the reliability and load serving capability of the existing 115 kV system in Greeley, it does not address one of the key objectives of the study, the reliability issues or load serving capabilities of the 44 kV system. This is due not only in part to the radial configuration of the 44 kV system, but also to the 115 kV point of interconnection to the transmission system. Because of its limitation to satisfy the objectives of the study, Alternative 5 was not selected as the preferred solution.

In order to adequately satisfy the outlined objectives; ensure system reliability, provide flexibility to accommodate future load growth and allow beneficial resource development while aligning with other ongoing transmission projects and studies in the northeast Colorado area and eliminate portions of the antiquated 44 kV system, the NECO Subcommittee proposes to construct Alternative 1 as the preferred Northern Greeley Area Transmission Plan.

In addition to providing the capability to serve the Customer load request, Alternative 1 aligns with the Tri-State proposed SWEP by beginning to extend interconnected, higher voltage transmission north of the City of Greeley. This provides additional transmission sources and upgraded voltages to increase capacity, load-serving capability and resource accommodation north of Greeley which facilitates the long-range transmission plans in northeastern Colorado, and can potentially interconnect to future transmission expansion projects that will be studied starting in 2017.

Recommended Project Plan (Alternative 1: Northern Greeley Area Transmission Plan)

Detailed Northern Greeley Area Transmission Plan Description

This project consists of approximately 21 miles of new 230/115 kV transmission, and three new substations in order to increase reliability, load-serving capability and resource accommodation both in and northeast of Greeley. The transmission will originate from the existing Western Area Power Administration (Western) Ault Substation and ultimately terminate at the PSCo Cloverly Substation, adjacent to the existing PSCo Pleasant Valley Substation. Besides terminating at the Cloverly Substation, the transmission will interconnect with two new substations. The first is referred to as “Husky” formerly “New Ault”, and is planned to be built near the existing PSCo Ault 44 kV substation. The second is referred to as “Graham Creek” formerly “New Eaton” and is planned to be built near the existing PSCo Eaton 44 kV Substation. The transmission will be built to allow for future double-circuit, 230 kV operation, but will initially be operated as a single-circuit.

Below is a list of the transmission segments of the proposed Northern Greeley Area Transmission Plan:

Transmission:

1. **Ault – New Ault (Husky) 230 kV line:** A new transmission line would be built from the Western Ault Substation to the New Ault (Husky) Substation, which would be located near the existing PSCo Ault 44 kV Substation. This transmission line would be approximately 6.5 miles long and built double-circuit 230 kV capable. Only one circuit would initially be installed and operated at 230 kV.
2. **New Ault (Husky) – New Eaton (Graham Creek) 115 kV line:** A new transmission line would be built from the New Ault (Husky) Substation to the New Eaton (Graham Creek) Substation, which would be located near the existing PSCo Eaton 44 kV Substation. This transmission line would be approximately 7 miles long and built double-circuit 230 kV capable. Only one circuit would initially be installed and operated at 115 kV.
3. **New Eaton (Graham Creek) – Cloverly Tap 115 kV line:** A new transmission line would be built from the New Eaton (Graham Creek) Substation to the Cloverly Tap location (currently Pleasant Valley Tap), the location of the existing double-circuit 44 kV line to the Pleasant Valley 44 kV Substation. This transmission line would be approximately 7.5 miles long and built double-circuit 230 kV capable. Only one circuit would initially be installed and operated at 115 kV.
4. **Cloverly Tap – Cloverly 115 kV line:** From Cloverly Tap, utilize the existing 2.5 miles of 115 kV capable structures (presently strung and operated at 44 kV). Jumper the existing 0.75 miles of 44 kV transmission conductor between Cloverly Tap and the DCP Lucerne 2 Tap, forming a two-conductor bundle. From DCP Lucerne 2, reconductor the existing northern 44 kV transmission line to complete the 115 kV circuit into Cloverly Substation which is located adjacent to the existing PSCo Pleasant Valley 44 kV Substation. From Cloverly Substation, reconductor the existing southern 44 kV transmission line to the DCP Lucerne 2 location as scoped in the Rimrock – Blue Grama Project.

Substations:

1. **New Ault (Husky) Substation:** A new substation would be built at a location near the existing PSCo Ault 44 kV Substation. The substation needs to accommodate 230 kV, 115 kV, and 44 kV terminations and equipment, including:
    a. A new 230/115 kV, 280 MVA autotransformer (allow space for one more)
    b. A single 115/44 kV, 60 MVA autotransformer (can use existing system spare)
    c. A new 115/12.47 kV, 50 MVA distribution transformer (allow space for two more)
    d. termination equipment for the 230 kV line to the Western Ault substation
    e. termination equipment for the 115 kV line to Graham Creek Substation
    f. termination equipment for the 44 kV line to Continental Substation
    g. A new 115 kV – 30 MVAr Capacitor bank with two steps of 15 MVAr for voltage regulation
    h. miscellaneous substation equipment associated with protection, communication, etc.
    i. Enough land to accommodate the ultimate configuration (6 – 230 kV termination, 8 – 115 kV terminations, 2 – 44 kV terminations)
2. **New Eaton (Graham Creek) Substation:** A new substation would be built at a location near the existing PSCo Eaton 44 kV Substation. The substation needs to accommodate 115 kV terminations and equipment, including:
    a. A new 115/12.47 kV, 50 MVA distribution transformer (allow space for two more)

   b. termination equipment for the 115 kV line to the Husky Substation
   c. termination equipment for the 115 kV line to Cloverly Substation
   d. miscellaneous substation equipment associated with protection, communication, etc.
   e. Enough land to accommodate the ultimate configuration (6 – 115 kV terminations)
3. **Cloverly Substation:** Expand the existing Cloverly Substation located adjacent to the existing PSCo Pleasant Valley 44 kV Substation. The substation needs to accommodate 115 kV terminations and equipment, including:
   a. A new 115/12.47 kV, 50 MVA distribution transformer (allow space for two more)
   b. termination equipment for the 115 kV line to the Graham Creek Substation
   c. termination equipment for the 115 kV line to Monfort Substation
   d. termination equipment for the 115 kV line to the retail Customer (Rimrock – Blue Grama) – in-service by Q4 2016
   e. miscellaneous substation equipment associated with protection, communication, etc.
   f. enough land to accommodate the ultimate configuration (8 – 115 kV terminations)

Figure 10 below shows a map of the proposed Northern Greeley Transmission Plan, and Figure 11 shows the Cloverly Tap – Clovely segment in greater detail.

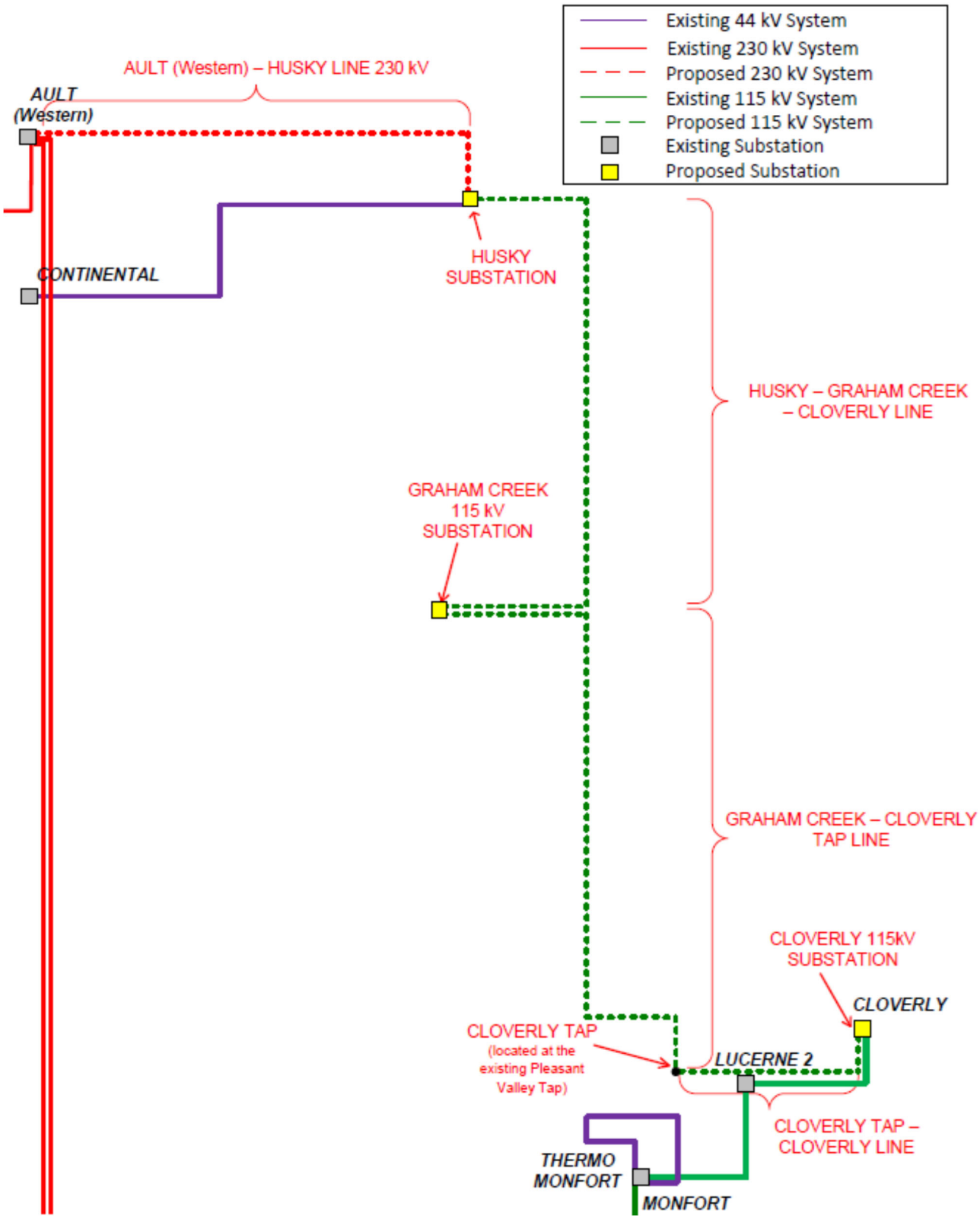

Figure 10: Northern Greeley Transmission Plan

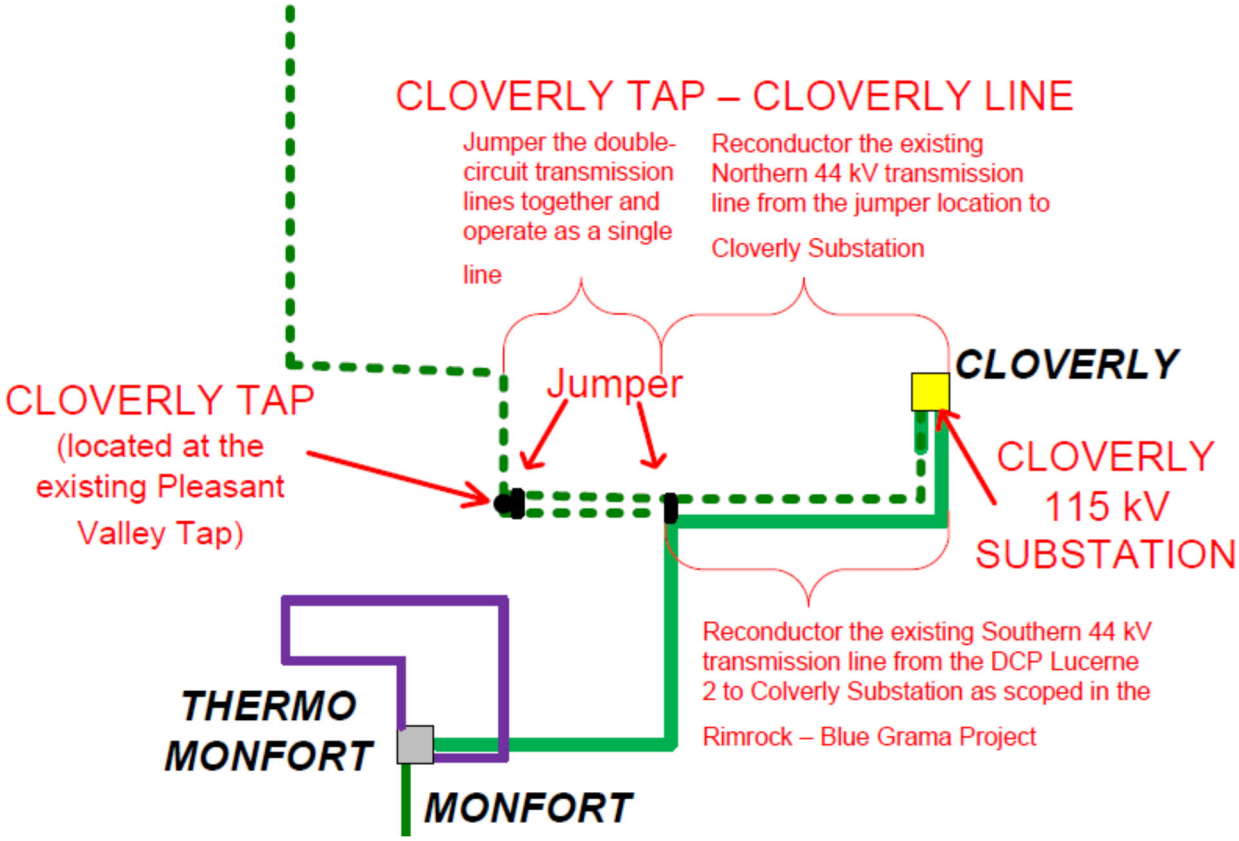

Figure 11: Cloverly Tap – Cloverly Detail

The result of Northern Greeley Area Transmission Plan effectively increases the load-serving capability of the transmission system north of the City of Greeley as well as upgrades the exiting 44 kV system to 115 kV, allowing for the transfer of existing radially served 44 kV retail customers to a more reliable interconnected (looped) 115 kV system.

The preliminary estimated transmission costs for the Northern Greeley Area Transmission is $64.5 million dollars. Table 5 below provides a breakdown of the estimated transmission costs.

GAP-North	TAM
LAND	$ 497,293
LINE	$ 36,881,833
ROW	$ 2,892,032
SUB	$ 24,248,106
Grand Total	**$ 64,519,264**

Table 5: Transmission Costs for the Northern Greeley Area Transmission Plan

Figure 12 shows a side-by-side comparison of the transmission in the Greeley Area before and after the addition of the Northern Greeley Area Transmission Plan.

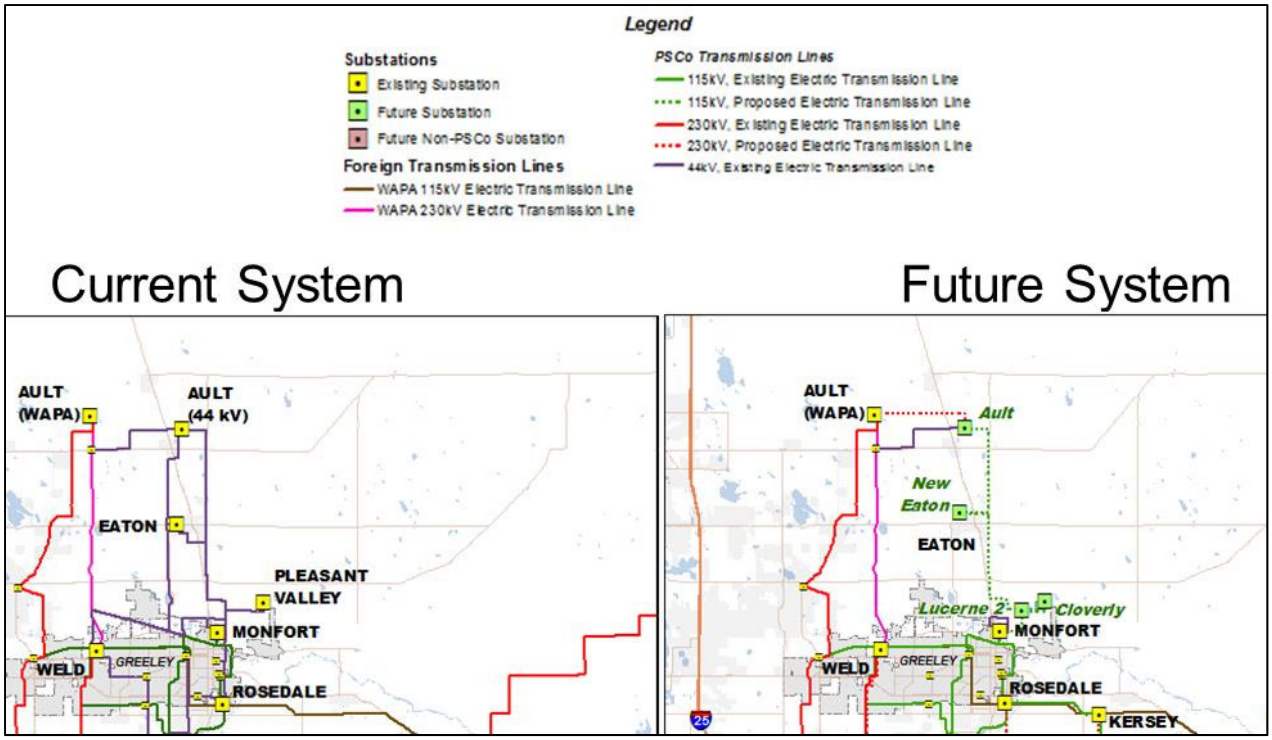

Figure 12: Side-by-Side Comparison of Northern Greeley Transmission

In addition to increasing the load serving capability, the project aligns with long range transmission plans in northeastern Colorado. Figure 13 below depicts a conceptual long range plan for the Greeley area. The NECO Subcommittee will continue its analysis of this area by evaluating the Southern Greeley area beginning in 2017.

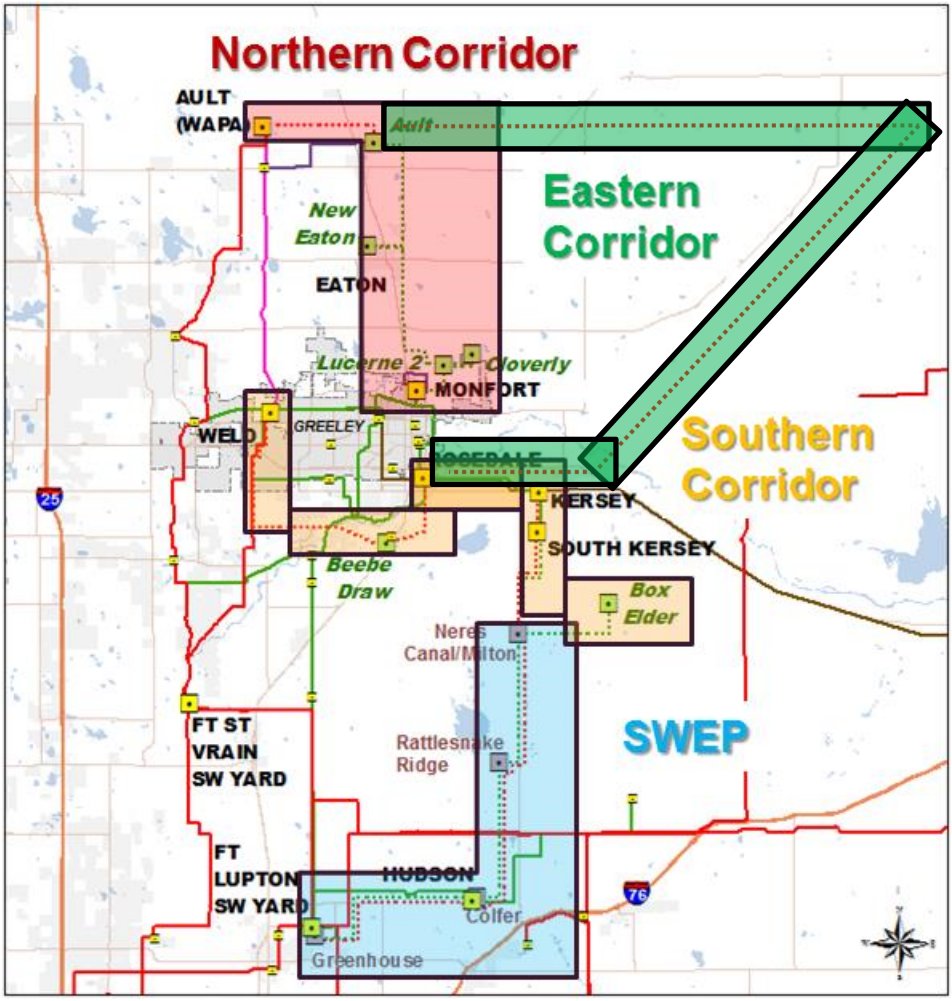

Figure 13: Conceptual Long Range Transmission Plan

VI. Sensitivity Analysis

In addition to the steady state power flow and voltage analysis performed on the benchmark and alternative 1 cases, further analysis was conducted by the NECO Subcommittee to better understand the impact of the additions to the transmission system. This analysis consisted of several sensitivities that were developed and agreed to by the NECO Subcommittee for the benchmark and alternative 1 cases. Upon request from a NECO Subcommittee participant, an expanded analysis of the Craig Unit 1 retirement sensitivity was conducted to determine the impact to the benchmark and alternative 1 cases.

Sensitivity Analysis

The NECO Subcommittee worked together to develop a list of sensitivities to study using the benchmark and alternative 1 cases. The list below describes those sensitivities that were developed agreed to be studied by the NECO Subcommittee.

1. Case
2. Case with the Godfrey – Gilcrest 115 kV “normal open” closed

3. Case with high north to south power flow along the TOT 7 path
4. Case with high north to south power flow along the TOT 7 path and the Godfrey – Gilcrest 115 kV "normal open" closed
5. Case with high oil and gas load development for PSCo and Tri-State (SWEP and North Greeley)
6. Case with high oil and gas load development for PSCo and Tri-State and high north to south power flow along the TOT 7 path
7. Case with high oil and gas load development for PSCo and Tri-State, high north to south power flow along the TOT 7 path and the Godfrey – Gilcrest 115 kV "normal open" closed
8. Case with low and high renewable generation
9. Case with the retirement of Craig Unit 1
10. Case with the addition of local generation in the Greeley area
11. Case with high oil and gas load development for PSCo and Tri-State and the addition of local generation in the Greeley area

The sensitivity analysis was conducted in the same manner as the steady state power flow and voltage analysis using the same methodology and criteria. Results for the sensitivities using the benchmark model were compared side-by-side with the benchmark case while results for the sensitivities using the alternative 1 model were compared side-by-side with the alternative 1 case. Again, any pre-existing thermal and voltage violations falling within the study methodology criteria were excluded from the tabulated results to avoid them from being attributed to the sensitivities that were studied.

Closing the Godfrey – Gilcrest 115 kV segment was evaluated as a sensitivity to analyze the power flows through the Greeley area 115 kV transmission system. When this transmission pathway is closed and alternate pathway for power to flow across TOT 7 is created by diverting power through the Greeley area 115 kV system. The closing of this segment allowed for increased operational flexibility, however, it also increased the loadings of certain 115 kV elements, specifically the 230/115 kV transformers at Weld and the Weld – Greeley 115 kV line.

For the sensitivities studying high north to south power flows along the TOT 7 path, generation was generally increased at units located north of the Greeley area and reduced in units located to the south. Area interchange was also adjusted to import power from the north of the study area. From these adjustments, the TOT 7 power flows in the benchmark and alternative 1 cases were increased from -34.0 MW and -40.3 MW (the negative indicating a south to north power flow) respectively to around 500 MW. A detailed list of the generation units that were adjusted for each of the high TOT 7 sensitivity scenarios can be found in Appendix I.

The high oil and gas load sensitivity was developed to analyze the impacts of large retail oil and gas development in the area. Through the NECO Subcommittee, PSCo and Tri-State provided a high oil and gas load forecast for the Greeley area. These loads were added to the cases to simulate and study their development to the transmission system. A list of the loads and their locations can be found in Appendix I.

Based on the TOT 7 values in the benchmark and alternative 1 cases, and in an effort to speed up the study process, the NECO Subcommittee decided to eliminate the low and high renewable penetration sensitivity from the analysis at the July 29th, 2016 meeting.

For sensitivities evaluating the development of local area generation, the NECO Subcommittee determined the 69 MW, gas fired generator near the existing PSCo UNC 115 kV Substation would be used. This generation facility consists of three gas fired turbines, is the largest in the City of Greeley, and until 2013, obtained a power purchase agreement with PSCo. Although not in operation at this time, the generation facility still exists and recently had an upgrade to the natural gas supply line for the turbines. The facility does not have a purchase power agreement with any transmission provider, and therefore does not provide power. The NECO Subcommittee selected this unit for the sensitivity based on its, location, size and ability to be quickly connected to the transmission system.

Sensitivity Analysis Results

Based on the results of the sensitivity analysis, for the benchmark case, voltage collapse was observed on the 44 kV transmission system for the high oil and gas load scenarios, indicative that the 44 kV system is not capable of accommodating significant load growth. The addition of Alternative 1 and subsequent removal of the northern 44 kV transmission system allows for the high oil and gas load sensitivities to solve, thereby increasing the load serving capability of the transmission system.

Furthermore, the addition of Alternative 1 mitigated the thermal overloads of the existing Monfort 115/44 kV 60 MVA transformer that are seen in benchmark case sensitivities for closing the Godfrey – Gilcrest 115 kV line segment, stressing the north to south TOT 7 power flows with the Godfrey – Gilcrest 115 kV line segment closed and for adding local generation to the 115 kV system. Alternative 1 also reduced the loadings of the two Weld 230/115 kV 150 MVA transformers to below 100% of their thermal ratings for all benchmark case sensitivities except for those with stressed north to south TOT 7 power flows, where there remaining overloads were below the transformer emergency ratings. However, Alternative 1 does not mitigate the overloads of these transformers in the event of a Weld 230 kV bus fault.

For the stressed north to south TOT 7 power flow sensitivities in the benchmark case, the Western owned, double circuit, Ault – Weld 230 kV line was loaded to approximately 112% of its thermal rating limit when one of the lines was taken out of service. This overload is a result of the generation dispatch and area interchange changes made to increase the north to south power flows. Again, with the addition of Alternative 1 and removal of the northern 44 kV transmission system, the flows on the 230 kV lines are redistributed through the new 115 kV transmission, eliminating the overload of the lines. Approximately (104 MW) of power flow was observed to be diverted through the addition of the Northern Greeley Area Transmission Plan.

Additionally, Alternative 1 mitigated all of the selected multiple contingency (P4) overloads observed in the benchmark case sensitivities with the exception of the Airport – Boyd 115 kV line. Alternative 1 was however able to significantly reduce the loading of this line. Western has indicated they have a project in their 10 year plan to address this issue.

The sensitivity examining the retirement of the Craig Unit 1 generation facility for both the benchmark and alternative 1 cases showed that the unit retirement has a minimal impact on the study results. Additional details of this sensitivity are discussed below in the Craig Unit 1 Retirement Analysis section.

Finally, the addition of Alternative 1 provides a higher voltage transmission system with two points of service to the Husky, Graham Creek and Cloverly Substations, thereby increasing their reliability of service.

It is important to note that with the addition of Alternative 1 the power flows on the Monfort – Lucerne 115 kV line on the east side of Greeley are increased as they become part of the looped higher voltage transmission system.

Tables for the steady state power flow results for the sensitivity analysis can be found in Appendix J.

Craig Unit 1 Retirement Analysis

In September 2016, an announcement was made that Craig Unit 1 would be shut down by 2025. Because this date was prior to the study case date, a member of the NECO Subcommittee requested an expanded analysis of the Craig Unit 1 retirement sensitivity.

The expanded analysis for the Craig Unit 1 retirement sensitivity explored two additional generation dispatch scenarios and used the power flows in and out of Western's Ault Substation to compare their impact to the Greeley and study areas. These scenarios were labeled 9B and 9C. One of the additional sensitivities was run to model the generation exactly as suggested by a member of the NECO Subcommittee (9B), while the other was run to reflect a more accurate dispatch with the Valmont generation unit shut down (scheduled to retire by 2017), and the Cabin Creek generation at levels that more accurately reflect actual operation (9C).

A contingency analysis was performed for each of the additional sensitivities, and the results were compared in a side-by-side analysis with the benchmark case and the Craig Unit 1 retirement sensitivity (sensitivity 9 in the above mentioned sensitivity list). Furthermore, a list of the generation tables were developed to show the dispatch of the generation units in Area 70 and 73, and indicate generation that was changed. Finally, one-line diagrams for the Ault 230 kV and 345 kV buses were developed for each of the scenarios to show how power flows are distributed out of the Ault Substation.

From these results the NECO Subcommittee concluded that the impacts due to the retirement of Craig Unit 1 are minimal to the Greeley and study areas.

The side-by-side contingency comparison list, generation dispatch tables and one-line diagrams for the Craig Unit 1 Retirement Analysis can be found in Appendix K.

VII. Voltage Stability Analysis

The voltage stability study utilized Power – Voltage, or "PV" analysis to determine how much load (power, or "P") could be served before hitting voltage ("V") limitations. The alternative 1 case was used for the

voltage stability analysis to identify the maximum load serving capability of the transmission project. Three (3) scenarios were studied, with load being added in 10 MW increments to a maximum of 500 MW at each of the new substations; Husky, Graham Creek and Cloverly independently. Prior to the incremental load additions, **67.4 MW** of load was transferred from the 44 kV system to the new 115 kV transmission line in the following distribution:

- Husky – 9.3 MW
- Graham Creek – 19.6 MW
- Cloverly – 38.5 MW

The load transfers represent the 44 kV loads at the existing Ault, Eaton and Pleasant Valley 44 kV Substations that will be transferred to the new 115 kV system as part of Alternative 1.

For each study, three (3) selected contingencies were taken:

- Ault –Husky 230 kV
- Husky 230/115 kV Transformer
- Monfort – Lucerne 115 kV

Each study was allowed to run until the full 500 MW was added at each substation or until voltage collapse occurred on the system. Generation for the incremental load additions were supplied from the area swing at Comanche 2 with generation limits turned off. Parameters for the study analysis are listed below:

	Base Case Solutions	**Contingency Solutions**
Tap Adjustments	Stepping	Lock Taps
Area Interchange Control	Tie Lines Only	Disabled
Switched Shunt Adjustments	Enable All	Lock All

Table 6: PV Study Analysis Parameters

In addition to the voltage stability analysis performed on the alternative 1 case, the same analysis was performed on seven (7) potential expansion scenarios to the alternative 1 case to identify the maximum load serving capability of the transmission projects that could be added to Alternative 1 in the future. Below lists the cases for which a voltage stability analysis was performed.

Case Label	Description
PV01	01 - Alternative 1
PV02	02 - Alternative 1 + Graham Creek - Weld 115 kV
PV03	03 - Alternative 1 + Graham Creek - Greeley 115 kV
PV04	04 - Alternative 1 + Cloverly - Rosedale 115 kV
PV05	05 - Alternative 1 + Husky - Rosedale 230 kV
PV06	06 - Alternative 1 + Husky - Cloverly - Rosedale 230 kV
PV07	07 - Alternative 1 + Husky - Graham Creek - Rosedale 230 kV
PV08	08 - Alternative 1 + Double Circuit Ault - Husky AND Two Husky 230/115 kV Transformers

Table 7: List of PV Analysis Study Scenarios

Both the voltage and thermal limits were identified along with the limiting element and subsequent contingency and the results were tabulated for each scenario. Furthermore, the next voltage and thermal limit and limiting element beyond the initial limit were identified and tabulated.

Finally, a voltage stability analysis was performed for all 8 scenarios using the same parameters with the exception of enabling the switched shunt devices for the contingency solution.

Voltage Stability Analysis Results

The complete tables from the voltage stability analysis for all the scenarios can be found in Appendix L.

From the voltage stability analysis, the load serving capability, in addition to the 67.4 MW of transferred load from the existing 44 kV transmission system, for Alternative 1 (PV01) based on thermal limitations is 120 MW at the Husky Substation, and 130 MW at the Graham Creek and Cloverly Substations. The next limiting element for each substation is the Weld – Greeley 115 kV line which is loaded beyond its thermal limit when 140 MW is added at the Husky Substation or when 160 MW is added at the Graham Creek or Cloverly Substations.

When considering the other potential expansion scenarios, the load serving capability was increased in each instance. The addition of the Graham Creek – Weld 115 kV line provides a greater load serving capability (160 MW with Graham Creek – Cloverly 115 kV being the limit) than the addition of the Graham Creek – Greeley 115 kV line (120 MW with Weld – Greeley 115 kV being the limit). When considering the next limiting elements, the load serving capabilities are increased to 220 MW and 200 MW respectively.

The addition of a Cloverly – Rosedale 115 kV line increases the load serving capability of Alternative 1 to 170 MW.

Adding a Husky – Rosedale 230 kV line to Alternative 1 and interconnecting the 230 kV line at the Cloverly Substation provides greater load serving capability (170 MW with Graham Creek – Cloverly 115 kV being the limit) than interconnecting it at the Graham Creek Substation (160 MW with Graham Creek – Cloverly 115 kV also being the limit.

Finally, when adding a second Ault –Husky 230 kV line and a second 230/115 kV 280 MVA transformer at Husky the load serving capability is 130 MW.

VIII. Ault Interconnection Evaluation

As part of the recommended Alternative 1, a new 230 kV termination is required at the Western owned Ault Substation. Special attention was paid to the power flows both in and out of the 230 kV and 345 kV buses at the Ault Substation to determine the impact of the new interconnection. Table 8 below shows a side-by-side comparison of the 230 kV bus power flows at the Ault Substation for the benchmark case and alternatives studied.

Ault 230 kV Powerflow Data						
		Case				
	Branch	0-01	1-01	2-01	3-01	5-01
IN	Ault 230kV - Ault 345kV	-168.2	-169.7	-169.7	-169.9	-165.4
	Ault 230kV - Ault 345kV	-166.9	-168.4	-168.5	-168.6	-164.2
	Ault 230kV - Ault 345kV	-184.6	-186.2	-186.3	-186.4	-181.5
	Ault 230kV - Archer 230kV	-87.5	-89.7	-89.7	-90	-84.1
	Ault 230kV - Terry Ranch 230kV	-68.7	-71.6	-71.7	-72	-64.2
	Ault 230kV - Rawhide 230kV	-97.1	-102.4	-102.7	-103.3	-97.6
OUT	Ault 230kV - Windsor 230kV	117.8	106.6	106.2	104.9	123.9
	Ault 230kV - Carey 230kV	152.4	141.9	141.4	140.2	152.2
	Ault 230kV - Weld 230kV	219.7	187	185.2	181.1	208.5
	Ault 230kV - Weld 230kV	219.7	187	185.2	181.1	208.5
	Ault 230kV - Ault 115kV	63.5	61.5	61.4	61.2	63.8
	Ault 230kV - New Ault 230kV	N/A	103.8	109	121.5	N/A
	Total Flow In to Ault	-773	-788	-788.6	-790.2	-757
	Total Flow Out from Ault	773.1	787.8	788.4	790	756.9

Table 8: Ault 230 kV Power Flow Comparison

From the table it can be seen that constructing Alternative 1 provides an alternate path for approximately 104 MW of power flow out of the Ault Substation to the Greeley area while minimally impacting the total power flow in and out of the substation.

Appendix M provides the power flow diagrams for the Ault 230 kV bus that supports the values listed in the table for the benchmark and alternative 1 cases.

Similarly, Table 9 below shows a side-by-side comparison of the 345 kV bus power flows at the Ault Substation for the benchmark case and alternatives studied.

Ault 345 kV Powerflow Data						
		Case				
	Branch	0-01	1-01	2-01	3-01	5-01
IN	Ault 345kV - Craig 345kV	-122.2	-124.7	-124.8	-125.0	-117.6
	Ault 345kV - Laramie River 345kV	-397.9	-400.1	-400.1	-400.4	-394.0
OUT	Ault 230kV - Ault 345kV	168.4	169.9	169.9	170.1	165.6
	Ault 230kV - Ault 345kV	167.1	168.6	168.7	168.8	164.4
	Ault 230kV - Ault 345kV	184.6	186.2	186.3	186.5	181.6
	Total Flow In to Ault	-520.1	-524.8	-524.9	-525.4	-511.6
	Total Flow Out from Ault	520.1	524.7	524.9	525.4	511.6

Table 9: Ault 345 kV Power Flow Comparison

The table indicates that flows on the 345 kV bus are minimally impacted by the addition of Alternative 1.

Appendix M provides the power flow diagrams for the Ault 345 kV bus that supports the values listed in the table for the benchmark and alternative 1 cases.

A contingency analysis was performed as part of the steady state power flow and voltage analysis. From this analysis, no overloads were observed on transmission elements in or out of the Ault Substation as a result of the addition of Alternative 1. Power flows on the Ault – Weld, Ault – Windsor and Ault – Carey 230 kV lines were all observed to decrease with the addition of Alternative 1. Results of the contingency analysis can also be found in Appendix M.

Ault Interconnection Results

The studies indicate that there are no adverse impacts associated with interconnecting new 230 kV transmission to the Ault Substation. The Project improves the reliability in the area by providing another high voltage path from Ault, which improves steady state and contingency performance.

TOT 7 System Operating Limit

This study considered the potential impacts to the TOT 7 transfer path by determining the TOT 7 operating limit in both the base case and the case with Alternative 1 in-service. In this study, when generation was increased to the north of TOT 7, and decreased to the south of it, the system intact TOT 7 operating limit was increased from approximately 390 MW to 562 MW with the addition of Alternative 1. The limiting element for determining the operating limit was the loss of one of the Ault – Weld 230 kV lines, which resulted in the overload of the other Ault – Weld 230 kV line.

From this analysis it was determined that with the addition of Alternative 1 there are no adverse impacts on TOT 7.

IX. Conclusion

Based on these studies, the NECO Subcommittee has identified that the transmission system in and around the City of Greeley is experiencing reliability issues due to aging transmission infrastructure and the increasing customer demand for electricity. Specifically, it has identified the reliability issues associated with the radial configuration of the 44 kV system. It has also identified that at current growth rates, the 44 kV transmission system will no longer be able to adequately support load growth beyond 2018. The studies have also indicated the load serving capability limitations of the 115 kV system in the Greeley area as well as the resource capacity constraints in an area where there is significant resource development potential.

In response to these issues, and to develop a transmission improvement plan for the area, the NECO Subcommittee has developed and is recommending a transmission plan that would accomplish the objective of this study; replace the existing, antiquated and non-standard, 44 kV system with higher voltage transmission facilities, transfer the loads from the 44 kV system to a higher and more reliable transmission network, improve overall reliability, load serving capability, and resource accommodation in the area, and align with other transmission planning efforts in the Greeley area of northeast Colorado.

The NECO Subcommittee is recommending Alternative 1 as the Northern Greeley Area Transmission Plan. This plan is recommended to successfully mitigates both system intact and single contingency (N-1) overloads, as well as certain select multiple contingency overloads. The plan also transfers almost 70

MW of existing loads from the 44 kV radial transmission system to a new higher voltage system, and increases the load-serving capability in area by at least 120 MW. The plan also adds another transmission outlet to the constrained transmission path south of the Ault Substation, and although not specifically determined, the plan allows for future generation resource accommodation, and aligns with other transmission planning efforts in northeast Colorado such as Tri-State's SWEP. Finally, the proposed plan makes practical use of existing facilities and transmission corridors.

On February 16, 2017, the CCPG agreed that this report met the objectives of the scope, and the results were technically adequate and accurate. One party, the Office of Consumer Counsel, did not agree with the rest of CCPG.

1.0 PURPOSE

- This document serves to ensure that calculations are performed by the PSCo Transmission Service Provider to maintain awareness of available transmission system capability and future flows on the PSCo system as well as those of PSCo neighbors. Steps in this procedure are used to meet the requirements of the MOD-001-1a NERC Reliability Standard (and subsequent versions).

- Available Transfer Capability (ATC) is defined in the NERC Glossary as:

  A measure of the transfer capability remaining in the physical transmission network for further commercial activity over and above already committed uses. It is defined as Total Transfer Capability less Existing Transmission Commitments (including retail customer service), less a Capacity Benefit Margin, less a Transmission Reliability Margin, plus Postbacks, plus counterflows.

2.0 APPLICABILITY AND RESPONSIBILITIES

- Manager, Transmission Control Center – responsible for acting as the point of contact and managing the ATC processes; represents the PSCo Transmission Operator (TOP) and Transmission Service Provider (TSP) functions.

- Manager, Real Time Planning Engineering – responsible for assisting in the determination and calculation of ATC.

- Manager, Transmission Planning– responsible for representing the PSCO Transmission Planner (TP) and Planning Coordinator (PC) functions.

3.0 APPROVERS

Name	Title
Robert Staton	PSCo Control Center Manager
Dean Schiro	Manager, Real Time Planning
Betty Mirzayi	Manager, Transmission Planning (PSCo)

4.0 VERSION HISTORY

Date	Version Number	Change
Effective 4/1/2011	1.0	Initial version – created as part of MOD-001-1 implementation
03/31/2013	2.0	Moved to Methodology folder from Procedures
04/01/2013	2.1	Errata. Added IREA to attachment 5
10/31/2014	3.0	Updated approver list and titles. Updated contact information in attachment 5.

03/31/2016	4.0	Updated contact information in Attachment 5
11/1/2017	5.0	Revised 4.1.1 to specify that Tri-State-Generation and Transmission is one of the WECC members that submits data to WECC's data bank cases. Updated Attachment 5, Notification contact information. Revised 5.3.2 to add time frame for notification of affected entities prior to effective date of change(s). Added Section 5.3.3 to ensure compliance with MOD-001-1, R5.

Methodology

1. ATC Methodology

1.1. PSCo has selected the "Rated System Path Methodology" as described in NERC Reliability Standard MOD-029-1a to calculate ATC.

2. Calculation of Total Transfer Capability (TTC)

2.1. The Manager, Transmission Control Center shall ensure that personnel conduct calculations using computer models to compute TTC in the following manner:

2.1.1. Coordinate with the RTPE group and TAM group to develop and run studies that satisfy the requirements listed in Attachment 1 and the following steps.

2.1.2. When calculating TTC, assumptions shall be no more limiting than those used in the planning of operations for the corresponding time period studied, providing such planning of operations has been performed for that time period.

2.1.2.1. Ensure assumptions (if used) such as contingencies, loop flow, generation re-dispatch, switching operating guides or data sources for load forecast and facility outages are clearly identified and able to be retrieved for verification at a later date.

2.1.3. Coordinate with the RTPE group to calculate TTC as follows:

2.1.3.1. Establish the TTC at the lesser of the value calculated below in steps 2.1.3.2 through 2.1.3.10 or any System Operating Limit (SOL) for that ATC Path.

2.1.3.2. Except where otherwise specified within this procedure, adjust base case generation and Load levels within the updated power flow model to determine the TTC (maximum flow or reliability limit) that can be simulated on the ATC Path while at the same time satisfying all planning criteria contingencies as follows:

- When modeling normal conditions, all Transmission Elements will be modeled at or below 100% of their continuous rating.
- When modeling contingencies the system shall demonstrate transient, dynamic and voltage stability, with no Transmission Element modeled above its Emergency Rating.
- Uncontrolled separation shall not occur.

2.1.3.3. IF the power flow model determines there is a "flow limited" TTC below the facility rating, THEN the thermal rating (or historical practice methodology) of that path may be used to set TTC.

- Note – evidence must be retained to demonstrate that the path was flow limited.
- Note – this is permitted as indicated in the NERC Letter shown in Attachment 6, until superseded by subsequent approved guidance from NERC.

2.1.3.4. IF it is impossible to actually simulate a reliability-limited flow in a direction counter to prevailing flows (on an alternating current Transmission line), THEN set the TTC for the non-prevailing direction equal to the TTC in the prevailing direction.

2.1.3.5. IF the TTC in the prevailing flow direction is dependant on a Special Protection System (SPS), THEN set the TTC for the non-prevailing flow direction equal to the greater of the maximum flow that can be simulated in the non-prevailing flow direction or the maximum TTC that can be achieved in the prevailing flow direction without use of a SPS.

2.1.3.6. IF an ATC Path whose capacity is limited by contract, THEN set TTC on the ATC Path at the lesser of the maximum allowable contract capacity or the reliability limit as determined by step 2.1.3.1.

2.1.3.7. IF an ATC Path whose TTC varies due to simultaneous interaction with one or more other paths, THEN develop a nomogram describing the interaction of the paths and the resulting TTC under specified conditions.

2.1.3.8. Determine if the TTC for the ATC Path being studied has an adverse impact on the TTC value of any existing path by modeling the flow on the path being studied at its proposed new TTC level simultaneous with the flow on the existing path at its TTC level while at the same time honoring the reliability criteria outlined in step 2.1.3.1.

2.1.3.8.1. Include the resolution of this adverse impact in its study report for the ATC Path.

2.1.3.9. IF multiple ownership of Transmission rights exists on an ATC Path, THEN allocate TTC of that ATC Path in accordance with the contractual agreement made by the multiple owners of that ATC Path.

2.1.3.10. For ATC Paths whose path rating, adjusted for seasonal variance, was established, known and used in operation since January 1, 1994, and no action has been taken to have the path rated using a different method, set the TTC at that previously established amount.

2.1.4. Create a study report that describes the steps above that were undertaken, including the contingencies and assumptions used, when determining the TTC and the results of the study. IF three phase fault damping is used to determine stability limits, THEN the report shall also identify the percent used and include justification for use unless specified otherwise in this procedure.

2.1.5. Within 7 calendar days of the finalization of the study report, the Manager, Transmission Control Center shall make available to the Transmission Service Provider of the ATC Path, the most current value for TTC and the TTC study report documenting the assumptions used and steps taken in determining the current value for TTC for that ATC Path.

- Note – for PSCo, the Manager, Transmission Control Center is the PSCo TOP and TSP.

3. Calculation of Existing Transmission Commitments (ETC)

3.1. The Manager, Transmission Control Center shall ensure that personnel conduct calculations to compute ETC use the equations in Attachment 2.

4. Calculation of ATC

4.1. The Manager, Transmission Control Center shall ensure that personnel conduct calculations using computer models to compute ATC in the following manner:

4.1.1. Data from the following entities is used in conjunction with PSCo data to calculate ATC:

- WECC data bank cases (which are comprised of data submitted by WECC members, including Tri-State Generation and Transmission Association.)
- Western Area Power Administration (TOT studies)
- Platte River Power Authority (TOT studies)
- Public Service Company of New Mexico

4.1.2. The ATC calculation model shall use the equations in Attachment 3.

4.1.3. When calculating ATC, assumptions shall be no more limiting than those used in the planning of operations for the corresponding time period studied, providing such planning of operations has been performed for that time period.

- Note - Ensure assumptions (if used) such as contingencies, loop flow, generation re-dispatch, switching operating guides or data sources for load forecast and facility outages are clearly identified and able to be retrieved for verification at a later date.

4.1.4. Counterflows will be assumed to be zero on all ATC paths except LAMAR.

4.1.4.1. Counterflows on Lamar may be used in non-firm ATC as follows:

- confirmed reservations = included
- expected interchange = zero
- internal counterflow = zero

4.1.5. Allocate ATC as follows:

4.1.5.1. IF more than one line comprises an ATC path, THEN allocate the ATC to the entire set of lines as a whole.

4.1.5.2. IF there are multiple owners of an ATC path, THEN allocate ATC according to contractual arrangements.

4.1.5.3. IF there are concerns raised regarding forward looking congestion management, seams coordination, or other issues as identified by the TSP or other TSPs, THEN the Manager, Transmission Control Center shall coordinate with the RTPE group to determine if a change to the methodology, or process within the methodology should be included to handle those concerns within the calculation and allocation.

4.1.6. Include planned generation and transmission outages, consistent with those reported in the WECC Coordinated Outage System (COS) (which includes partial day, and partial month outages) into the model that computes the ATC values.

4.1.6.1. IF there are outages from other TSPs that cannot be mapped to the model used to calculate ATC, THEN the Manager, Transmission Control Center shall coordinate with the RTPE group to determine if manual adjustment is required in the model to account for the outage.

4.2. ATC values shall be calculated for the following time increments:

4.2.1. Hourly values for at least the next 48 hours.

4.2.2. Daily values for at least the next 31 calendar days.

4.2.3. Monthly values for at least the next 12 months (months 2-13).

4.3. ATC values shall be calculated for at the following frequencies (unless none of the values in the ATC calculation have changed):

4.3.1. Hourly values, once per hour.

4.3.2. Daily values, once per day.

4.3.3. Monthly values, once per week.

5. Administration

5.1. Providing Data to other TOPs and TSPs for ATC Calculation Purposes

5.1.1. PSCo provides data to for ATC calculation purposes to:

- Platte River Power Authority
- Western Area Power Administration
- WECC (to populate data bank base cases)

5.1.2. IF a TOP or TSP not listed above desires data for ATC calculation purposes, THEN contact the Manager, Transmission Control Center at the address or phone number listed in step 5.4.1.

5.2. Availability of ATCID

5.2.1. The Manager, Transmission Control Center shall ensure the ATCID is posted on PSCo's OASIS website.

5.2.2. IF an entity cannot access the PSCo website, THEN contact the Manager, Transmission Control Center at the address or phone number listed in step 5.4.1 to obtain a direct copy or get instructions on how to get access to the PSCO OASIS website.

5.3. Distribution of proposed changes to the ATCID

5.3.1. The Manager, Transmission Control Center will notify the entities in Attachment 5 of proposed changes to the ATCID at least 30 calendar days prior to the proposed effective date.

5.3.2. IF an entity has concerns regarding changes to the ATCID, THEN contact the Manager, Transmission Control Center at the address or phone number listed in step 5.4.1 within 2 weeks of being notified of proposed changes. Concerns regarding the ATCID after the effective date of changes may be conveyed to the Manager, Transmission Control Center as explained in 5.4.1, however those concerns may not be addressed before the next scheduled review of this procedure, at the discretion of the Manager, Transmission Control Center.

5.3.3. The Manager, Transmission Control Center, shall provide the entities identified in Attachment 5 with a final version of the ATCID after comments from affected entities are addressed and internal approval has been obtained The final approved ATCID shall then be posted on PSCo's OASIS site in accordance with 5.2.1.

5.4. Sharing of Data Used to Determine ATC

5.4.1. Requests for the data supporting ATC calculations shall be directed to the Manager, Transmission Control Center at the address or phone number listed below.

Phone Number:

303-273-4797

Mailing Address:

Manager, Transmission Control Center (PSCo)

Attn: ATC Data Request

18201 West 10th Ave.

Golden, CO, 80401

5.4.2. Requests are permitted from:

5.4.2.1. Transmission Operators (TOPs), Transmission Service Providers (TSPs), Reliability Coordinators (RCs), or Planning Coordinators (PCs).

5.4.3. Data request for up to 13 months into the future are permitted on the items in Attachment 4.

5.4.4. The Manager, Transmission Control Center shall begin to provide the information, within 30 days of receiving the request.

5.4.5. The data shall be made available on the schedule specified by the requestor (not more frequently than once per hour, unless mutually agreed by the requestor and PSCo).

5.4.6. The data shall be made available by one of the two methods (or any alternative mutually agreed upon method):

- posting to a website or location from which the requestor will be able to obtain the data
- direct transfer of the data (e.g. email)

5.5. The Manager, Transmission Control Center shall ensure personnel track the cumulative hours that hourly values are not calculated but that a change in the

calculated value identified in the ATC equation occurred. (Note – the MOD-001-1 standard permits up to 175 hours of no calculation before a violation limit is reached)

5.6. Document Retention

5.6.1. Requests for ATC data, and communications regarding proposed ATCID changes shall be retained as evidence of compliance with the applicable NERC Standards.

5.7. Availability of TTC Study Report and TTC Values

5.7.1. IF a TSP desires a copy of the TTC study and the TTC values, THEN contact the Manager, Transmission Control Center at the address or phone number listed in step 5.4.1.

Attachment 1

TTC Model Criteria

The following describes the TTC model criteria. The model shall:

1. Include at least:
   - The Transmission Operator area. Equivalent representation of radial lines and facilities 161kV or below is allowed.
   - All Transmission Operator areas contiguous with its own Transmission Operator area. (Equivalent representation is allowed.)
   - Any other Transmission Operator area linked to the Transmission Operator's area by joint operating agreement. (Equivalent representation is allowed.)
   - Models all system Elements as in-service for the assumed initial conditions.
   - Models all generation (may be either a single generator or multiple generators) that is greater than 20 MVA at the point of interconnection in the studied area.
   - Models phase shifters in non-regulating mode, unless otherwise specified in this procedure.
   - Uses Load forecast by Balancing Authority.
   - Uses Transmission Facility additions and retirements.
   - Uses Generation Facility additions and retirements.
   - Uses Special Protection System (SPS) models where currently existing or projected for implementation within the studied time horizon.
   - Models series compensation for each line at the expected operating level unless specified otherwise in this procedure.
   - Includes any other modeling requirements or criteria specified in this procedure.

2. Use Facility Ratings as provided by Transmission Owner and Generator Owners.

Attachment 2

ETC Equations

$ETC_F = NL_F + NITS_F + GF_F + PTP_F + ROR_F + OS_F$

NL_F is the firm capacity set aside to serve peak Native Load forecast commitments for the time period being calculated, to include losses, and Native Load growth, not otherwise included in Transmission Reliability Margin or Capacity Benefit Margin.

$NITS_F$ is the firm capacity reserved for Network Integration Transmission Service serving Load, to include losses, and Load growth, not otherwise included in Transmission Reliability Margin or Capacity Benefit Margin.

GF_F is the firm capacity set aside for grandfathered Transmission Service and contracts for energy and/or Transmission Service, where executed prior to the effective date of a Transmission Service Provider's Open Access Transmission Tariff or "safe harbor tariff."

PTP_F is the firm capacity reserved for confirmed Point-to-Point Transmission Service.

ROR_F is the firm capacity reserved for Roll-over rights for contracts granting Transmission Customers the right of first refusal to take or continue to take Transmission Service when the Transmission Customer's Transmission Service contract expires or is eligible for renewal.

OS_F is the firm capacity reserved for any other service(s), contract(s), or agreement(s) not specified above using Firm Transmission Service as specified in the ATCID.

$ETC_{NF} = NITS_{NF} + GF_{NF} + PTP_{NF} + OS_{NF}$

$NITS_{NF}$ is the non-firm capacity set aside for Network Integration Transmission Service serving Load (i.e., secondary service), to include losses, and load growth not otherwise included in Transmission Reliability Margin or Capacity Benefit Margin.

GF_{NF} is the non-firm capacity set aside for grandfathered Transmission Service and contracts for energy and/or Transmission Service, where executed prior to the effective date of a Transmission Service Provider's Open Access Transmission Tariff or "safe harbor tariff."

PTP_{NF} is non-firm capacity reserved for confirmed Point-to-Point Transmission Service.

OS_{NF} is the non-firm capacity reserved for any other service(s), contract(s), or agreement(s) not specified above using non-firm transmission service as specified in the ATCID.

Attachment 3

ATC Equations

$ATC_F = TTC – ETC_F – CBM – TRM + Postbacks_F + counterflows_F$

ATC_F is the firm Available Transfer Capability for the ATC Path for that period.

TTC is the Total Transfer Capability of the ATC Path for that period.

ETC_F is the sum of existing firm commitments for the ATC Path during that period.

CBM is the Capacity Benefit Margin for the ATC Path during that period.

TRM is the Transmission Reliability Margin for the ATC Path during that period.

$Postbacks_F$ are changes to firm Available Transfer Capability due to a change in the use of Transmission Service for that period, as defined in Business Practices.

$counterflows_F$ are adjustments to firm Available Transfer Capability as determined by the Transmission Service Provider and specified in the ATCID.

$ATC_{NF} = TTC – ETC_F – ETC_{NF} – CBM_S – TRM_U + Postbacks_{NF} + counterflows_{NF}$

ATC_{NF} is the non-firm Available Transfer Capability for the ATC Path for that

period.

TTC is the Total Transfer Capability of the ATC Path for that period.

ETC_F is the sum of existing firm commitments for the ATC Path during that period.

ETC_{NF} is the sum of existing non-firm commitments for the ATC Path during that period.

CBM_S is the Capacity Benefit Margin for the ATC Path that has been scheduled during that period.

TRM_U is the Transmission Reliability Margin for the ATC Path that has not been released for sale (unreleased) as non-firm capacity by the Transmission Service Provider during that period.

$Postbacks_{NF}$ are changes to non-firm Available Transfer Capability due to a change in the use of Transmission Service for that period, as defined in Business Practices.

$counterflows_{NF}$ are adjustments to non-firm Available Transfer Capability as determined by the Transmission Service Provider and specified in the ATCID.

Attachment 4

Data That Can Be Provided Upon Request

Refer to the body of this procedure regarding the process for requesting the following information. The MOD-001-1 Standard specifies:

> R9.1.1. If the Transmission Service Provider uses the data requested in its transfer or Flowgate capability calculations, it shall make the data used available.
>
> R9.1.2. If the Transmission Service Provider does not use the data requested in its transfer or Flowgate capability calculations, but maintains that data, it shall make that data available.
>
> R9.1.3. If the Transmission Service Provider does not use the data requested in its transfer or Flowgate capability calculations, and does not maintain that data, it shall not be required to make that data available.

- Expected generation and Transmission outages, additions, and retirements.
- Load forecasts.
- Unit commitments and order of dispatch, to include all designated network resources and other resources that are committed or have the legal obligation to run, as they are expected to run, in one of the following formats chosen by the data provider:
  - Dispatch Order
  - Participation Factors
  - Block Dispatch
- Aggregated firm capacity set-aside for Network Integration Transmission Service and aggregated non-firm capacity set aside for Network Integration Transmission Service (i.e. Secondary Service).
- Firm and non-firm Transmission reservations.
- Aggregated capacity set-aside for Grandfathered obligations
- Firm roll-over rights.
- Any firm and non-firm adjustments applied by the Transmission Service Provider to reflect parallel path impacts.
- Power flow models and underlying assumptions.
- Contingencies, provided in one or more of the following formats:
  - A list of Elements
  - A list of Flowgates
  - A set of selection criteria that can be applied to the Transmission model used by the Transmission Operator and/or Transmission Service Provider
- Facility Ratings.
- Any other services that impact Existing Transmission Commitments (ETCs).
- Values of Capacity Benefit Margin (CBM) and Transmission Reliability Margin (TRM) for all ATC Paths.

- Values of TTC and ATC for all ATC Paths for those Transmission Service Providers receiving the request that do not consider Flowgates when selling Transmission Service.
- Source and synchronize identification and mapping to the model.

Attachment 5

Entities to be Notified Prior to ATCID Changes

NERC Reliability Standard MOD-001-1a requires that the Transmission Operator make available its ATCID to certain parties listed in the standard.

The list below are the entities identified that shall receive notification (Prior to the effective date) when changes to the ATCID are proposed. (Identified in the NERC Registry 8/11/2017)

Entity	email	Within PSCo	Neighbor	TOP	TSP	TP	RC	PC (PA)
Public Service Company of Colorado	Bob Staton Manager, Transmission Control Center (PSCo) 18201 West 10th Ave. Golden, CO, 80401 Robert.staton@xcelenergy.com 303-273-4797 Robert K Johnson Principal Engineer 18201 West 10th Ave. Golden, CO, 80401 Robert.k.johnson@xcelenergy.com 303-273-4893	X		X	X	X		X
Southwestern Public Service Company	Kyle McMenamin Manager, Transmission Control Center (SPS) 806-640-6306 Kyle.McMenamin@xcelenergy.com		X	X	X	X		
Tri State Generation & Transmission Association	Doug Reese, Operations Support Manager 303-254-3676 dreese@tristategt.org Mary Ann Zehr 303-254-3098 mzehr@tristategt.org Shannon Gilmore 303-254-3576 sgilmore@tristategt.org	X	X	X	X	X		
Platte River Power Authority	Matthew Thompson Systems Operations Compliance Specialist and OASIS Administrator Cell: (970) 219-7617 thompsonm@prpa.org Derek Book System Operations Compliance Specialist 970-229-5391 bookd@prpa.org	X	X	X	X	X		X

Western Area Power Administration – Rocky Mountain Region AND Western Area Power Administration – Desert Southwest Region	Patrick Harwood Reliability Compliance Specialist 602-605-2883 Harwood@wapa.gov Jonathon W. Steward Transmission Business Unit Manager Western Area Power Administration/Rocky Mt. Region work: 602-605-2774 Msg: 480-284-0602 Steward@WAPA.GOV		X	X	X	X		X
Public Service Company of New Mexico	Don Lacen Manager, Compliance Operations Public Service Company of New Mexico Alvarado Square - MS EP11 Albuquerque, NM 87158 (505) 241-2409 dlacen@pnm.com Tom Duane Manager, Transmission Planning (505) 241-4569 Thomas.duane@pnm.com		X	X	X	X		X
Black Hills/Colorado Electric Utility Company, LP	Dan Kline Director of Transmission Services 605-721-1396 Dan.Kline@blackhillscorp.com	X		X	X	X		
Colorado Springs Utilities	Warren Rust Operations Superintendent 719-668-4128 rrust@csu.org Paul Morland Principal Engineer - Operations 719-668-4159 pmorland@csu.org Cliff Berthelot Principal Engineer - Planning 719-668-8091 cberthelot@csu.org Phillip Shafeei pshafeei@csu.org Jeff Hanson Transmission Planning Engineer jhanson@csu.org		X	X	X	X		X
Peak Reliability	wsm.model.updates@peakrc.com rcrequesteddocuments@peakrc.com Don Pape, Compliance Manager Peak RC Vancouver, WA (360) 713-9586						X	
Intermountain Rural Electric Association	Pamela (Pederson) Feuerstein, PE Chief Operating Officer	X		X				

	P.O. Drawer A 5496 North U.S. Highway 85 Sedalia, CO 80135 Work: 720-733-5489 Cell: 303-885-4602 PFeuerstein@irea.Coop Andy Minter Transmission Operations Manager (720) 733-5578 aminter@irea.coop							
Southwest Power Pool	Don Shipley Manager, SPP Reliability Coordination Office 501-614-3581 Cell 501-350- 0433 E-mail dshipley@spp.org		X		X	X	X	X

Attachment 6

NERC Director of Enforcement grants extension of time for MOD-029-1 R2.1

http://www.nerc.com/docs/compliance/MOD-029%20letter-AJR%202011MAR03.pdf

NERC
NORTH AMERICAN ELECTRIC RELIABILITY CORPORATION

March 4, 2011

To Transmission Owners and Transmission Service Providers subject to MOD-029-1:

On February 24, 2011, a number of registered entities with in the Western Interconnection (the "WestConnect Utilities") submitted to NERC and to WECC a request for extension of time to comply with Reliability Standard MOD-029-001. This request follows efforts by the WestConnect Utilities to seek an extension of time from FERC, which was recently dismissed.[1] In its dismissal order, FERC ruled that "requests for extension should be considered through NERC's enforcement and compliance program." [2] In exercise of that authority, I am granting an extension of time as detailed below for all entities subject to MOD-029-1 R2.1 as that requirement is applied to "Flow Limited" paths.

Following the review of the WestConnect Utilities' recent filing with FERC and a thorough investigation by NERC and WECC of the concerns being raised by these entities, NERC has determined there to be a valid technical concern with the MOD-029-1 Reliability Standard (Rated System Path Methodology). This concern has the potential to affect any entities that have chosen to implement MOD-029-1 to some degree; the magnitude will depend on the unique characteristics of the applicable entity's system.

NERC understands that the current MOD-029-1 methodology may, in certain cases, lead to Total Transfer Capability (TTC) and Available Transfer Capability (ATC) values significantly lower than those previously used. MOD-029-01 Requirement 2, Sub-Requirement 2.1 requires the use of a simulation to determine the TTC:

> R2.1. Except where otherwise specified within MOD-029-1, adjust base case generation andLoad levels within the updated power flow model to determine the TTC (maximum flow or reliability limit) that can be simulated on the ATC Path while at the same time satisfying all planning criteria contingencies as follows:

When the simulation identifies a limiting piece of equipment that restricts the amount of flow on a path, that path is considered "Reliability Limited," and the TTC is set based on that flow. When the simulation cannot sufficiently load the transmission path such that a limit is

[1] Docket No. RM08-19-00 – "Request for Extension of Compliance Date and Request for Expedited Consideration of the WestConnect Utilities" (December 30, 2010); *Order Dismissing Request for Extension*, 134 FERC ¶ 61,118 (February 17, 2011).
[2] *Id.* at P. 12.

116-390 Village Blvd.
Princeton, NJ 08540
609.452.8060 | www.nerc.com

encountered, the path is referred to as being "Flow Limited." Currently, by virtue of requiring the TTC to be established based on the simulation, MOD-029 R2.1 seems to indicate the TTC should be established as the maximum flow simulated for those "Flow Limited" paths. Because of the inconsistencies between contract path scheduling and actual flows on the system, however this can result in cases where TTC is artificially constrained below what the system can actually accommodate. Setting the TTC equal to the maximum simulated flow and then using it to analyze contract-path schedules will not accurately account for parallel path flows and counterflows. Consequently, paths affected by parallel path flows and/or counterflows may have their ATC reduced to some degree. In examples provided to NERC by the WestConnect Utilities, there have been cases where TTCs have reduced by more than 75%.

While this appears to be primarily a commercial issue, the WestConnect Utilities have indicated that strict enforcement of the standard may cause a reliability impact on those entities that depend on the use of the transmission system to serve load. In any event, as a general principle, NERC works to ensure that NERC Reliability Standards do not cause undue restrictions or adverse impacts on competitive electricity markets.

Given the short amount of time remaining until the effective date of April 1, 2011, NERC advises all transmission owners and transmission service providers that have selected the MOD-029-1 methodology that, while they are still expected to be compliant with the standard on April 1, 2011, NERC will be delaying the implementation of MOD-029-01 Requirement 2, Sub-Requirement 2.1 for "Flow Limited" paths only, until such time as a modification to the standard can be developed that will mitigate the technical concern identified. While this request for an extension arose within the Western Interconnection, this delay in implementation for MOD-029-01, Sub-Requirement 2.1 will be available to any transmission owner or transmission service provider that chose the MOD-029-1 methodology, regardless of where located.

NERC is working with a group of industry technical experts to develop a SAR and suggested modifications to the standard. It is expected that such a modification will be consistent with current practices used today, and that the modification would be approved and filed within the next 5-8 months. NERC will also be working with its stakeholders to analyze the aforementioned inconsistencies between contract-path scheduling and actual flows on the system to determine if a longer-term solution is required.

In the interim, NERC suggests (but does not require) that entities calculate the TTC of "Flow Limited" paths consistent with practices used in the past (such as using the path thermal rating). During audits, any paths for which TTC has not been calculated based on R2.1 will be expected to be demonstrably "Flow Limited." Evidence to demonstrate this will be considered on a case by cases basis, but in general, a presentation of the studies showing the results of the simulation will be adequate proof of compliance.

NERC emphasizes that with the specific exception of the implementation of MOD-029-1 R2.1 on "Flow Limited" paths, all applicable entities are expected to proceed with their implementation plans for the ATC-related MOD standards. If any registered entity believes that it cannot meet the April 1, 2011 effective date for any of the other requirements in the ATC-related MOD standards, the entity should self report possible violations and develop and file mitigation plans covering each requirement of the applicable MOD standards for which the

entity will not be in compliance on the effective date. NERC encourages such entity to coordinate with its regional entity so that it can be prepared in anticipation of timely self-reporting by the effective date.

Joel deJesus
Director of Enforcement

cc: Connie White (WECC)
Jonathan First (FERC)
Thomas Loquvam
Blane Taylor
Amy Welander
Margaret Rostker
Douglas Harness
Kelly Barr
Ronald Moulton
Jim McMorran
Stephen Keene
Dennis Malone
David Zimmermann
James Burson

1.0 PURPOSE

- This document serves to promote the consistent and reliable calculation, verification, preservation, and use of Capacity Benefit Margin (CBM) to support analysis and system operations. Steps in this procedure are used to meet the requirements of the MOD-004-1 NERC Reliability Standard (and subsequent versions).

- CBM is defined in the NERC Glossary as:

  The amount of firm transmission transfer capability preserved by the transmission provider for Load-Serving Entities (LSEs), whose loads are located on that Transmission Service Provider's system, to enable access by the LSEs to generation from interconnected systems to meet generation reliability requirements. Preservation of CBM for an LSE allows that entity to reduce its installed generating capacity below that which may otherwise have been necessary without interconnections to meet its generation reliability requirements. The transmission transfer capability preserved as CBM is intended to be used by the LSE only in times of emergency generation deficiencies.

2.0 APPLICABILITY AND RESPONSIBILITIES

- Manager, Transmission Control Center – responsible for acting as the point of contact and managing the CBM processes.

- Manager, Real Time Planning Engineering – responsible for assisting in the review of CBM set aside requests; responsible for determination of CBM values to be used by the PSCo Transmission Service Provider.

- Manager, Transmission Planning – responsible for assisting in the review of CBM set aside requests; responsible for determination of CBM values to be used for transmission planning.

- Transmission Control Center Operators – responsible for administering the steps for use of CBM.

- Load Serving Entities (LSEs), Resource Planners (RPs) – responsible for making requests and providing information as indicated in this procedure when requesting CBM set aside or requesting use of CBM.

3.0 APPROVERS

Name	Title
Robert Staton	PSCo Control Center Manager
Dean Schiro	Manager, Real Time Planning Engineering

Betty Mirzayi	Manager, Transmission Planning (PSCo)

4.0 VERSION HISTORY

Date	Version Number	Change
Effective 4/1/2011	1.0	Initial version – created as part of MOD-004-1 implementation
10/31/14	2.0	Updated approver list. Updated titles. Updated attachment 1 contact list

Methodology

1. Transmission Capacity Set Aside Request Process

1.1. Load Serving Entities (LSEs) and Resource Planners (RPs) within the PSCo Balancing Authority Area that need Transmission capacity to be set aside as CBM shall:

1.1.1. Determine their need for CBM based on one or more of the following methods to determine the Generation Import Capability Requirement (GCIR).

- Loss of Load Expectation (LOLE) studies.
- Loss of Load Probability (LOLP) studies.
- Deterministic risk-analysis studies.
- Reserve margin or resource adequacy requirements established by other entities, such as municipalities, state commissions, regional transmission organizations, independent system operators, Regional Reliability Organizations, or regional entities.

1.1.2. Identify the expected import path(s) or source region(s).

1.1.3. Identify the desired time frame (start, end) for the need.

1.1.4. Provide the technical point of contact for the requesting entity (name, phone number, email address)

1.1.5. Provide information from steps above, at least 60 days prior to the desired start time, to the following point of contact at the PSCo Transmission Service Provider (TSP) via the address below or contact the Manager, Transmission Control Center for an email address to send the request:

Phone Number:

303-273-4797

Mailing Address:

Manager, Transmission Control Center (PSCo)

Attn: CBM Request

18201 West 10th Ave.

Golden, CO, 80401

2. Establishing CBM

- Note – Prior to MOD-004-1 effective date, PSCo maintained a value of zero ("0") CBM. Until a CBM set aside request is received pursuant to Section 1 and a CBM value is established per Section 2, a CBM value of zero ("0") value will be established for all ATC import paths.

2.1. Upon receipt of a Transmission capacity set aside request, the Manager, Transmission Control Center will coordinate with Real Time Planning Engineering (RTPE) and Transmission Planning (TP) to review the request to determine the amount of Transmission capacity that can be set aside to accommodate the requestor's needs.

2.1.1. RTPE or TP shall contact the requestor to review the basis and parameters for their request.

2.1.2. The analysis shall include a review of the requestor's assumptions and studies (including, but not limited to, reserve margin or resource adequacy requirements) used to determine the Generation Capability Import Requirement (GCIR).

2.1.3. The analysis may include factors such as existing ATC, for the requested import path.

2.2. Based on the analysis by RTPE or TP, the Manager, Transmission Control Center will establish a CBM value for ATC import path(s). (Note - this value may be zero for some or all of the paths).

2.2.1. The Manager, Transmission Control Center will contact the requestor and discuss the proposed CBM values.

2.2.2. IF there is disagreement on the proposed CBM values, THEN a review between the requestor and the Manager, Transmission Control Center shall be held to determine if any adjustments to the studies or assumptions should occur.

2.2.3. The CBM values shall be allocated based on the expected import paths or source regions provided by the requestor

2.2.4. The CBM values shall be determined by RTPE for 13 full calendar months (months 2 -14) following the current month (month in which value is determined).

2.2.4.1. These values will be used in the calculation of ATC.

2.2.5. The CBM values shall be determined by TP for 13 full calendar months (years 2 -10) following the current year (year in which value is determined).

2.2.5.1. These values will be used in planning.

2.2.6. The CBM values will be determined at least every 13 months.

2.3. Within 31 days after establishing or revising CBM values, the Manager, Transmission Control Center will notify all LSEs and RPs that requested CBM Transmission capacity to be set aside, the amount of CBM set aside.

2.3.1. CBM values will also be posted on the PSCo Open Access Same Time Information System (OASIS).

3. Use of CBM

3.1. Energy Deficient Entities (LSEs or BAs) requesting the use of CBM shall:

3.1.1. Request and receive a NERC Energy Emergency Alert (EEA) 2 or higher status.

3.1.2. Use a valid OASIS CBM reservation number in the Request for Interchange.

3.2. Upon receipt of a Request for Interchange using CBM, the Transmission Control Center operators shall:

3.2.1. Verify the load of the energy deficient entity is within the PSCo Transmission Service Provider area.

3.2.2. Verify the declaration of an EEA 2 or higher by the Reliability Coordinator (RC) for the PSCo Balancing Authority by checking status with the RC via WECCnet or telephone.

3.2.3. Verify that any out of service transmission elements that could provide additional transfer capability are not available to be returned to service

3.2.4. Verify that CBM is available by checking the availability on OASIS

3.2.4.1. IF CBM was reserved as non-firm under the provisions of Section 4 then curtail those transactions as necessary to make CBM available to the Energy Deficient Entity.

3.2.4.2. IF the amount of CBM requested exceed the amount available and established under Section 2, THEN that request will be considered on a case by case basis to include the following factors:

- Additional transfers across the path(s) would not cause a reliability risk
- Concurrence from the WECC RC to allow additional transfers and to suspend, temporarily, scheduling limits
- Firm Arranged Interchange will not be curtailed
- Entities already using the CBM will be contacted to see if some can be released

3.2.5. Evaluate the entity's need to have waived, within the bounds of reliable operation, Real-time timing and ramping requirement. Communication with the Energy Deficient Entity may be needed.

3.2.6. Approve the Arranged Interchange using CBM by the Energy Deficient Entity AFTER meeting steps 3.2.1 through 3.2.5

4. Conditions Under Which CBM May be Available as Non-firm Service

4.1. Transmission capacity set aside as CBM may be release as non-firm service when no EEA2 or higher has been declared for the PSCo Balancing Authority Area.

4.1.1. Unused portions of any CBM, if released as non-firm service, will be available on OASIS.

5. Administration

5.1. Availability of CBMID

5.1.1. The Manager, Transmission Control Center shall ensure the CMBID is posted on PSCo's OASIS website.

5.1.2. IF an entity cannot access the PSCo website, THEN contact the Manager, Transmission Control Center at the address or phone number listed in step 1.1.5 to obtain a direct copy or get instructions on how to get access to the PSCO OASIS website.

5.2. Distribution of proposed changes to the CBMID

5.2.1. The Manager, Transmission Control Center will notify the entities in Attachment 1 of proposed changes to the CBMID prior to the proposed CBMID effective date.

5.2.2. IF an entity has concerns regarding changes to or the content of the CBMID, THEN contact the Manager, Transmission Control Center at the address or phone number listed in step 1.1.5.

5.3. Distribution of CBM values

5.3.1. New or revised CBM values will be conveyed within 31 days under step 2.3 to those LSEs or RPs requesting CBM set aside.

5.4. Sharing of Models and Data Used to Determine CBM

5.4.1. Requests for models, data, and supporting information shall be directed to the Manager, Transmission Control Center at the address or phone number listed in step 1.1.5.

5.4.2. Requests are permitted from

5.4.2.1. Associated Transmission Operators (TOPs)

5.4.2.2. Transmission Service Providers (TSPs), Reliability Coordinators (RCs), Transmission Planners (TPs), Resource Planners (RPs), or Planning Coordinators (PCs).

5.4.3. The Manager, Transmission Control Center shall provide copies of the requested data, subject to confidentiality and security requirements, within 30 days of receiving the request.

5.5. Document Retention

5.5.1. Request for CBM set aside, communications regarding proposed CBMID changes, and communications regarding established or revised CBM values shall be retained as evidence of compliance with the applicable NERC Standards.

Attachment 1

Entities to be Notified Prior to CBMID Changes

NERC Reliability Standard MOD-004-1 requires:

> R2. The Transmission Service Provider that maintains CBM shall make available its current CBMID to the Transmission Operators, Transmission Service Providers, Reliability Coordinators, Transmission Planners, Resource Planners, and Planning Coordinators that are within or adjacent to the Transmission Service Provider's area, and to the Load Serving Entities and Balancing Authorities within the Transmission Service Provider's area, and notify those entities of any changes to the CBMID prior to the effective date of the change.

The list below are the entities identified that shall receive notification (Prior to the effective date) when changes to the CBMID are proposed. (Identified in the NERC Registry 2/17/2011)

Entity	email	Within PSCo	Neighbor	TOP	TSP	TP	RC	RP	PC (PA)	LSE	BA
Public Service Company of Colorado	Bob Staton Manager, Transmission Control Center (PSCo) 18201 West 10th Ave. Golden, CO, 80401 Robert.staton@xcelenergy.com 303-273-4797 Robert K Johnson Principal Engineer 18201 West 10th Ave. Golden, CO, 80401 Robert.k.johnson@xcelenergy.com 303-273-4893	X		X	X	X		X	X	X	X
Southwestern Public Service Company	Kyle McMenamin Manager, Transmission Control Center (SPS) 806-640-6306 Kyle.McMenamin@xcelenergy.com		X	X	X	X		X		X	X
Tri State Generation & Transmission Association	Doug Reese, Operations Support Manager 303-254-3676 dreese@tristategt.org Mark Riley Reliability Compliance Specialist 303-254-3143 marril@tristategt.org	X	X	X	X	X		X		X	
Platte River Power Authority	John Collins System Planning Manager 970-229-5272 collinsj@prpa.org Derek Book System Operations Compliance Specialist	X	X	X	X	X		X	X	X	

	970-229-5391 bookd@prpa.org										
Western Area Power Administration – Rocky Mountain Region AND Western Area Power Administration – Desert Southwest Region	Mike McElhany Manager, Transmission Business Unit 602-605-2662 MCELHANY@wapa.gov Patrick Harwood Reliability Compliance Specialist 602-605-2883 Harwood@wapa.gov		X	X	X	X			X		X
Public Service Company of New Mexico	Jeff Mechenbier Director Transmission Analysis Public Service Company of New Mexico Alvarado Square - MS 0604 Albuquerque, NM 87158 work: 505-241-4582 jeff.mechenbier@pnm.com Don Lacen Transmission Services Coordinator Public Service Company of New Mexico Alvarado Square - MS EP11 Albuquerque, NM (505) 241-2032 dlacen@pnm.com		X	X	X	X		X	X	X	X
Black Hills/Colorado Electric Utility Company, LP	Eric Egge Mgr Transmission Planning (605) 721-2646 Eric.Egge@blackhillscorp.com	X		X	X	X		X		X	
Colorado Springs Utilities	Warren Rust Operations Superintendent 719-668-4128 rrust@csu.org Paul Morland Principal Engineer - Operations 719-668-4159 pmorland@csu.org Cliff Berthelot Principal Engineer - Planning 719-668-8091 cberthelot@csu.org		X	X	X	X		X	X	X	X
Holy Cross Energy	David Bleakley Holy Cross Energy Senior Manager, Engineering Department 3799 Highway 82 Glenwood Springs, CO 81602 970-947-5449 dbleakley@holycross.com Diana Golis	X								X	

	Holy Cross Energy Manager, Power Supply and Contracts 3799 Highway 82 Glenwood Springs, CO 81602 970-947-5471 dgolis@holycross.com										
Peak Reliability	RCDESK@peakrc.com Don Pape, Compliance Manager Peak RC Vancouver, WA (360) 713-9586						X				
Southwest Power Pool	Don Shipley Manager, SPP Reliability Coordination Office 501-614-3581 Cell 501-350- 0433 E-mail dshipley@spp.org		X		X	X	X		X		

Methodology Document	
Xcel Energy	Public Service Company of Colorado
M-005 Transmission Reliability Margin Implementation Document (TRMID)	**Version: 2.0**
File Name: PSC-PRO-PSCo M-005 Transmission Reliability Margin Implementation Document (TRMID)	**Page 1 of 4**

1.0 PURPOSE

- This document serves to promote the consistent and reliable calculation, verification, preservation, and use of Transmission Reliability Margin (TRM) to support analysis and system operations. Steps in this procedure are used to meet the requirements of the MOD-008-1 NERC Reliability Standard (and subsequent versions).

- TRM is defined in the NERC Glossary as:

  The amount of transmission transfer capability necessary to provide reasonable assurance that the interconnected transmission network will be secure. TRM accounts for the inherent uncertainty in system conditions and the need for operating flexibility to ensure reliable system operation as system conditions change.

2.0 APPLICABILITY AND RESPONSIBILITIES

- Manager, Transmission Control Center – responsible for acting as the point of contact and managing the TRM processes; represents the PSCo Transmission Operator (TOP) and Transmission Service Provider (TSP) functions.

- Manager, Real Time Planning Engineering – responsible for assisting in the determination and calculation of TRM.

- Manager, Transmission Planning – responsible for representing the PSCO Transmission Planner (TP) function.

3.0 APPROVERS

Name	Title
Robert Staton	PSCo Control Center Manager
Dean Schiro	Manager, Real Time Planning Engineering
Betty Mirzayi	Manager of Transmission Planning (PSCo)

4.0 VERSION HISTORY

Date	Version Number	Change
Effective 4/1/2011	1.0	Initial version – created as part of MOD-008-1 implementation
10/31/2014	2.0	Moved to Methodology folder from Procedures. Updated approvers and titles.

Methodology

1. Establishing TRM Values

1.1. The Manager, Transmission Control Center shall coordinate with the Real Time Planning Engineering group to establish values for TRM.

1.2. Establish TRM values as follows:

1.2.1. ONLY the following components of uncertainty may be included in the TRM value determination. The following apply to all ATC paths for which a TRM value is determined:

Uncertainty Component	PSCo Treatment
Aggregate Load forecast.	Not used.
Load distribution uncertainty.	Not used.
Forecast uncertainty in Transmission system topology (including, but not limited to, forced or unplanned outages and maintenance outages).	Not used.
Allowances for parallel path (loop flow) impacts.	Not used.
Allowances for simultaneous path interactions.	Not used.
Variations in generation dispatch (including, but not limited to, forced or unplanned outages, maintenance outages and location of future generation).	Not used.
Short-term System Operator response (Operating Reserve actions).	Not used.
Reserve sharing requirements.	Included, based upon Rocky Mountain Reserve Sharing Group (RMRG) requirements, which change from time to time.
Inertial response and frequency bias.	Not used.

1.2.2. TRM will be determined using the same calculation for same day and real-time, day ahead and pre-schedule, and beyond day-ahead and pre-schedule (up to 13 months ahead).

1.2.2.1. Capacity Benefit Margin (CBM) shall not be included in TRM determination.

1.2.2.2. The TRM is calculated by conducting model simulations to establish the TRM. The following data is used in the calculation:

- Rocky Mountain Reserve Sharing Group (RMRG) latest approved seasonal reserve quotas
- the most recent power flow WECC base case for the upcoming season being evaluated

1.2.2.3. Conduct power flow cases, simulating a trip of the most severe single contingency (MSSC) in the PSCo fleet and then repeated with loss of the largest MSSC from the other Members.

- In each case the RMRG Members' response quotas are modeled for the respective unit loss.

1.2.2.4. The results of the simulations shall establish the allocation of TRM on various paths to account for the reserve delivery across the transmission network

1.3. TRM values will be determined at least once every 13 months.

1.4. Within 7 days after establishing or revising TRM values, the Manager, Transmission Control Center shall provide the TRM values to the Transmission Service Provider and Transmission Planner.

2. Administration

2.1. Availability of TRMID

2.1.1. The Manager, Transmission Control Center shall ensure the TRMID is posted on PSCo's OASIS website.

2.1.2. IF an entity cannot access the PSCo website, THEN contact the Manager, Transmission Control Center at the address or phone number listed in step 2.3.1 to obtain a direct copy or get instructions on how to get access to the PSCO OASIS website.

2.2. Distribution of TRM values

2.2.1. New or revised TRM values will be conveyed within 7 days under step 1.4 to the Transmission Service Provider and Transmission Planner.

2.3. Sharing of TRMID and underlying documentation

2.3.1. Requests for the TRM, and underlying documentation shall be directed to the Manager, Transmission Control Center at the address or phone number listed below.

Phone Number:

303-273-4797

Mailing Address:

Manager, Transmission Control Center (PSCo)

Attn: TRM Request

18201 West 10th Ave.

Golden, CO, 80401

2.3.2. Requests are permitted from

2.3.2.1. Transmission Operators (TOPs), Transmission Service Providers (TSPs), Reliability Coordinators (RCs), Transmission Planners (TPs), or Planning Coordinators (PCs).

2.3.3. The Manager, Transmission Control Center shall provide the information, in the format used by the PSCo Transmission Operator, within 30 days of receiving the request.

2.4. Document Retention

Request for TRM documentation, and communications regarding established or revised TRM values shall be retained as evidence of compliance with the applicable NERC Standards.